aiwa

aiwa SERVICE

Z-L10

SERVICE MANUAL

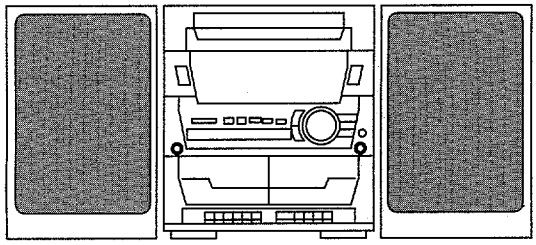

COMPACT DISC STEREO SYSTEM

- BASIC TAPE MECHANISM : TNZ1788-8MA5
- BASIC CD MECHANISM : 4ZG - 1 Z3N1DLSHM
- TYPE: EZ,K

REVISION PUBLISHING

SYSTEM	CD – CASSIVER	SPEAKER
Z-L10	CX-ZL10	SX-ZL50

- This Service Manual is the "Revision Publishing" and replaces "Simple Manual" (S/M Code No. 09-992-402-0T2).

- If requiring information about the CD mechanism,see Service Manual of 4ZG-1 (S/M Code No. 09-992-325-4N6).

S/M Code No. 09–996–402–0R2

SPECIFICATIONS

Main unit CX-ZL10

<FM Tuner section>

Tuning range	87.5 MHz to 108 MHz
Usable sensitivity (IHF)	16.8 dBf
Antenna terminal	75 ohms (unbalanced)

<MW Tuner section>

Tuning range	530 kHz to 1710 kHz (10 kHz step) 531 kHz to 1602 kHz (9 kHz step)
Usable sensitivity	350 uV/m
Antenna	Loop Antenna

<LW Tuner section>

Tuning range	144 kHz to 290 kHz
Usable sensitivity	1400 uV/m
Antenna	Loop Antenna

<Amplifier section>

Power output	Rated: 12W +12W (6ohms,T.H.D 1%, 1kHz) Reference: 15W +15W (6ohms, T.H.D 10%,1kHz)
Total harmonic distortion	0.1%(6W,1kHz,6ohms,DIN AUDIO)
Inputs	VIDEO / AUX/ PHONO IN : 500mV
Outputs	CD DIGITAL OUT (OPTICAL) SPEAKER : 6ohms or more PHONES : 32ohms

<Cassette deck section>

Track format	4 tracks, 2 channels stereo
Frequency response	50 Hz – 10000 Hz
Recording system	AC bias
Heads	Deck 1 : Recording/playback/erase head x 1 Deck 2 : Playback head x 1

<Compact disc player section>

Laser	Semiconductor laser (λ =780 nm)
D-A converter	1 bit dual
Signal-to-noise ratio	85 dB (1kHz,0dB)
Harmonic distortion	0.05% (1kHz,0dB)

<General>

Power requirements	230V AC, 50Hz
Power consumption	46 W
Dimensions of main unit (W x H x D)	360 x 394.5 x 350 mm
Weight of main unit	5.9 kg

Speaker system SX-ZL50

Cabinet type	2 way, bass reflex
Speakers	Woofer : 130 mm cone type Super tweeter : 20 mm ceramic type
Impedance	6 ohms
Output sound pressure level	87 dB/W/m
Dimensions (W x H x D)	260 x 444 x 215 mm
Weight	3.5 kg

• Design and specifications are subject to change without notice.

PROTECTION OF EYES FROM LASER BEAM DURING SERVICING

This set employs laser. Therefore, be sure to follow carefully the instructions below when servicing.

WARNING!!
WHEN SERVICING, DO NOT APPROACH THE LASER EXIT WITH THE EYE TOO CLOSELY. IN CASE IT IS NECESSARY TO CONFIRM LASER BEAM EMISSION. BE SURE TO OBSERVE FROM A DISTANCE OF MORE THAN 30cm FROM THE SURFACE OF THE OBJECTIVE LENS ON THE OPTICAL PICK-UP BLOCK.

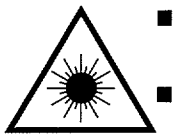

- Caution: Invisible laser radiation when open and interlocks defeated avoid exposure to beam.
- Advarsel: Usynlig laserstråling ved åbning, når sikkerhedsafbrydere er ude af funktion. Undgå udsættelse for stråling.

VAROITUS!
Laiteen Käyttäminen muulla kuin tässä käyttöohjeessa mainitulla tavalla saataa altistaa käyt-täjän turvallisuusluokan 1 ylittävälle näkymättömälle lasersäteilylle.

VARNING!
Om apparaten används på annat sätt än vad som specificeras i denna bruksanvising, kan användaren utsättas för osynling laserstrålning, som överskrider gränsen för laserklass 1.

CAUTION
Use of controls or adjustments or performance of procedures other than those specified herein may result in hazardous radiation exposure.

ATTENTION
L'utillisation de commandes, réglages ou procédures autres que ceux spécifiés peut entraîner une dangereuse exposition aux radiations.

ADVARSEL
Usynlig laserståling ved åbning, når sikkerhedsafbrydereer ude af funktion. Undgå udsættelse for stråling.

This Compact Disc player is classified as a CLASS 1 LASER product.
The CLASS 1 LASER PRODUCT label is located on the rear exterior.

CLASS 1	LASER PRODUCT
KLASSE 1	LASER PRODUKT
LUOKAN 1	LASER LAITE
KLASS 1	LASER APPARAT

Precaution to replace Optical block

(KSS-213F)

Body or clothes electrostatic potential could ruin laser diode in the optical block. Be sure to ground body and workbench, and ensure clothes do not touch the diode.

1) After the connection, remove solder shown in right figure.

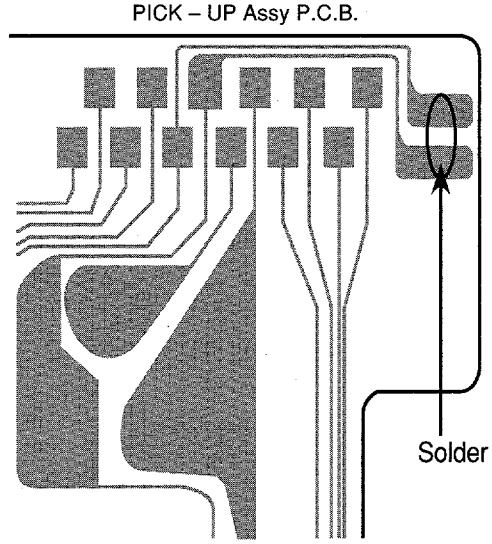

NOTE ON BEFORE STARTING REPAIR

1. Forced discharge of electrolytic capacitor of power supply block

When repair is going to be attempted in the set that uses relay circuit in the power supply block, electric potential is kept charged across the electrolytic capacitors (C101, 102) even though AC power cord is removed. If repair is attempted in this condition, secondary defect can occur.
In order to prevent the secondary trouble, perform the following measures before starting repair work.

Discharge procedure

① Remove the AC power cord.
② Connect a discharging resistor at an end of lead wire that has clips at both ends. Connect the other end of the lead wire to metal chassis.
③ Contact the other end of the discharging resistor to the positive (+) side (+VH) of C101. (For two seconds)
④ Contact the same end of the discharging resistor as step ③ to the negative (-) side (-VH) of C102 in the same way. (For two seconds)
⑤ Check that voltage across C101 and C102 has decreased to 1 V or less using a multimeter or an oscilloscope.

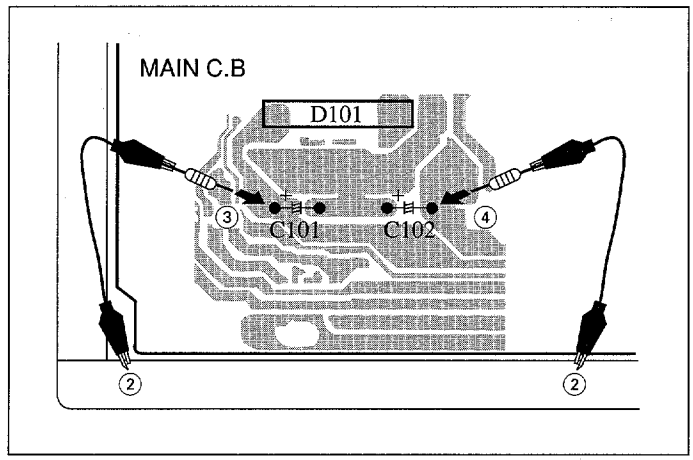

Fig-1

Select a discharging resistor referring to the following table.

Charging voltage (V) (C101, 102)	Discharging resistor (Ω)	Rated power (W)	Parts number
25-48	100	3	87-A00-247-090
49-140	220	5	87-A00-232-090

Note: The reference numbers (C101, C102) of the electrolytic capacitors can change depending on the models. Be sure to check the reference numbers of the charging capacitor on schematic diagram before starting the discharging work.

2. Check items before exchanging the MICROCOMPUTER

Be sure to check the following items before exchanging the MICROCOMPUTER. Exchange the MICROCOMPUTER after confirming that the MICROCOMPUTER is surely defective.

2-1. Regarding the HOLD terminal of the MICROCOMPUTER

When the HOLD terminal (INPUT) of the MICROCOMPUTER is "H", the MICROCOMPUTER is judged to be operating correctly. When this terminal is "L", the main power cannot be turned on. Therefore, be sure to check the terminal voltage of the HOLD terminal before exchange.
When the MICROCOMPUTER is not defective, the HOLD terminal can also go "L" when the POWER AMPLIFIER has any abnormalities that triggers the abnormality detection circuit on the MAIN C. B. that sets the HOLD terminal to "L".

- **Good or no good judgment of the MICROCOMPUTER**

① Turn on the AC main power.
② Confirm that the main power is turned on and the HOLD terminal of the MICROCOMPUTER keeps the "H" level or not.
③ When the HOLD terminal is "L" level, the abnormality detection circuit is judged to be working correctly and the MICROCOMPUTER is judged to be good.

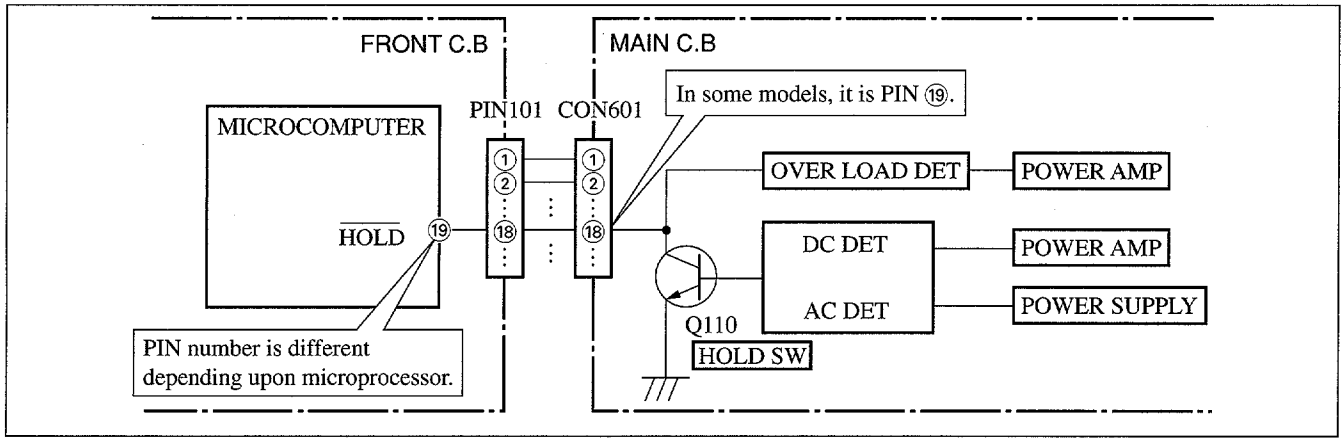

Fig-2-1

In such a case, check also if the POWER AMPLIFIER circuit or power supply circuit has any abnormalities or not.

2-2. Regarding reset

There are cases that the machine does not work correctly because the MICROCOMPUTER is not reset even though the AC power cord is re-inserted, or the software reset (pressing the STOP key + POWER key) is performed.
When the above described phenomenon occurs, it can lead to wrong judgment as if the MICROCOMPUTER is defective and to exchange the MICROCOMPUTER. In such a case, perform the forced-reset by the following procedure and check good or no good of the MICROCOMPUTER.

① Remove the AC power cord.

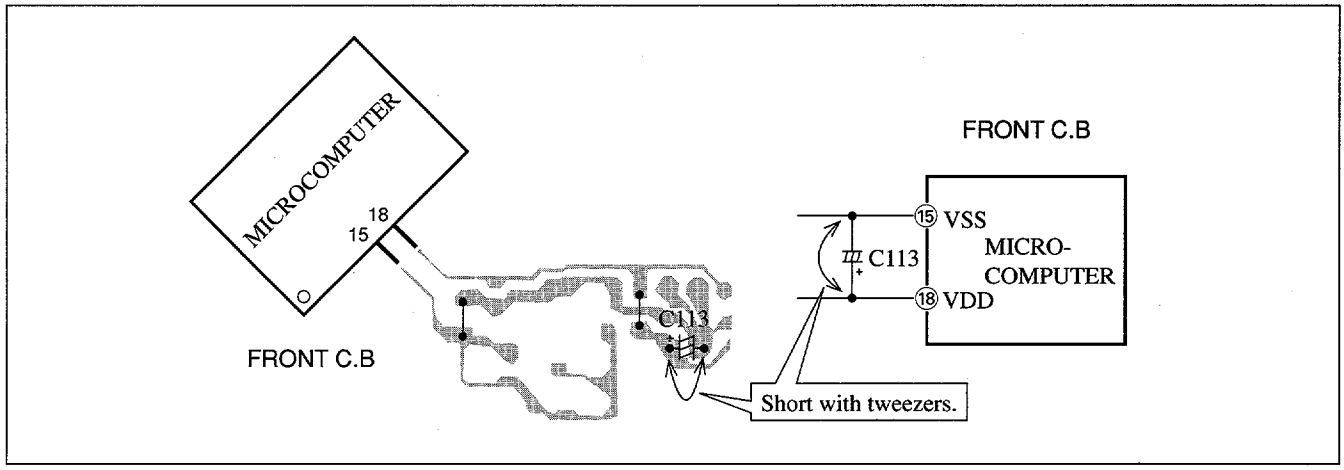

Fig-2-2

② Short both ends of the electrolytic capacitor C113 that is connected to VDD of the MICROCOMPUTER with tweezers.
③ Connect the AC power cord again. If the MICROCOMPUTER returns to the normal operation, the MICROCOMPUTER is good.

Note: The reference number or MICROCOMPUTER pin number of transistor (Q110) and electrolytic capacitor (C113) can change depending on the models. Be sure to check the reference numbers on schematic diagram before starting the discharging work.

2-3. Confirmation of soldering state of MICROCOMPUTER

Check the soldering state of the MICROCOMPUTER in addition to the above described procedures. Be sure to exchange the MICROCOMPUTER after surely confirming that the trouble is not caused by poor soldering but the MICROCOMPUTER itself.

ELECTRICAL MAIN PARTS LIST

If can't understand for Description please kindly refer to " REFERENCE NAME LIST ".

REF. NO.	PART NO.	KANRI NO.	DESCRIPTION
IC			
	8Z-MA5-611-010		C-IC,M38B57MCH-E219FP
	87-A20-914-010		IC,SPS-442-1-F
	87-017-889-010		IC,NJM4558LD
	87-A20-715-010		IC,M62439SP
	87-070-127-110		IC,LC72131 D
	87-A20-913-010		IC,LA1837NL
	87-A20-502-010		IC,BU1920
TRANSISTOR			
	87-026-610-080		TR,KTC3198GR
	87-A30-196-080		TR,2SC4115SRS
	87-026-609-080		TR,KTA1266GR
	89-213-702-010		TR,2SB1370 (1.8W)
	87-026-269-080		TR,DTA114ES
	87-026-219-080		TR,DTA144ES (0.3W)
	87-A30-090-080		FET,2SK2541
	87-026-287-080		TR,DTC143ES
	87-A30-256-010		TR,2SD1933
	87-A30-255-010		TR,2SB1342
	87-A30-091-080		FET,2SJ460
	87-026-218-080		TR,DTC144ES (0.2W)
	87-026-214-080		TR,DTA114YS (0.3W)
	89-305-352-380		TR,2SC535(BK)
	87-A30-164-080		TR,CSC2001K
	87-A30-092-080		FET,2SK439
DIODE			
	87-020-465-080		DIODE,1SS133 (110MA)
	87-A40-336-080		ZENER,MTZJ27D T-72
	87-A40-345-080		ZENER,MTZJ10C
	87-070-274-080		DIODE,1N4003 SEM
	87-A40-535-080		DIODE,1N5393-GOODARK
	87-017-932-080		ZENER,MTJ6.2B
	87-A40-466-080		ZENER,MTZJ2.7A
	87-017-931-080		ZENER,MTZJ5.6B
MAIN C.B			
C101	87-A10-520-090		CAP,E 3300-35 M SMG
C103	87-016-051-090		CAP,E 2200-35 SMG
C105	87-018-127-080		CAP, CER 470P-50V
C106	87-010-408-080		CAP, ELECT 47-50V
C107	87-010-384-080		CAP, ELECT 100-25V
C108	87-010-381-080		CAP, ELECT 330-16V
C111	87-010-247-080		CAP, E 100-50 M
C112	87-010-263-080		CAP, ELECT 100-10V
C113	87-010-403-080		CAP, ELECT 3.3-50V
C114	87-010-374-080		CAP, ELECT 47-10V
C122	87-010-384-080		CAP,E 100-25 M
C123	87-010-260-080		CAP, ELECT 47-25V
C207	87-010-546-080		CAP, ELECT 0.33-50V
C208	87-010-546-080		CAP, ELECT 0.33-50V
C209	87-018-133-080		CAPACITOR,CER 4700P-16V
C210	87-018-133-080		CAPACITOR,CER 4700P-16V
C211	87-010-403-080		CAP, ELECT 3.3-50V
C212	87-010-403-080		CAP, ELECT 3.3-50V
C213	87-010-260-080		CAP, ELECT 47-25V
C214	87-010-260-080		CAP, ELECT 47-25V
C219	87-010-544-080		CAP, ELECT 0.1-50V
C220	87-010-544-080		CAP, ELECT 0.1-50V
C221	87-018-211-080		CAP,TC-U 0.01-50 Z F
C222	87-018-211-080		CAP,TC-U 0.01-50 Z F
C223	87-018-134-080		CAPACITOR,TC-U 0.01-16
C224	87-018-134-080		CAPACITOR,TC-U 0.01-16
C229	87-018-123-080		CAP, CER 220P-50V
C230	87-018-123-080		CAP, CER 220P-50V
C237	87-018-134-080		CAPACITOR,TC-U 0.01-16
C253	87-018-131-080		CAP, CER 1000P-50V
C254	87-018-131-080		CAP, CER 1000P-50V
C255	87-018-115-080		CAP,TC-U 47P-50 B
C256	87-018-115-080		CAP,TC-U 47P-50 B
C257	87-018-119-080		CAP,TC-U 100P-50 B
C258	87-018-119-080		CAP,TC-U 100P-50 B
C301	87-018-131-080		CAP, CER 1000P-50V
C302	87-018-131-080		CAP, CER 1000P-50V
C303	87-018-195-080		CAP,TC U 1200P-16
C304	87-018-131-080		CAP, CER 1000P-50V
C307	87-010-263-080		CAP, ELECT 100-10V
C308	87-010-263-080		CAP, ELECT 100-10V
C309	87-018-115-080		CAP,TC-U 47P-50 B
C310	87-018-115-080		CAP,TC-U 47P-50 B
C315	87-010-374-080		CAP, ELECT 47-10V
C317	87-010-546-080		CAP, ELECT 0.33-50V
C318	87-010-546-080		CAP, ELECT 0.33-50V
C322	87-018-209-080		CAP,TC-U 0.1-50 Z F
C325	87-018-209-080		CAP,TC-U 0.1-50 Z F
C326	87-018-209-080		CAP,TC-U 0.1-50 Z F
C327	87-018-209-080		CAP,TC-U 0.1-50 Z F
C360	87-010-401-080		CAP, ELECT 1-50V
C361	87-010-374-080		CAP, ELECT 47-10V
C399	87-018-127-080		CAP, CER 470P-50V
C401	87-010-400-080		CAP, ELECT 0.47-50V
C402	87-010-400-080		CAP, ELECT 0.47-50V
C403	87-018-118-080		CAP,TC-U 82P-50 B
C404	87-018-118-080		CAP,TC-U 82P-50 B
C411	87-010-405-080		CAP, ELECT 10-50V
C412	87-010-405-080		CAP, ELECT 10-50V
C452	87-010-382-080		CAP, ELECT 22-25V
C458	87-018-131-080		CAP, CER 1000P-50V
C459	87-018-128-080		CAP, CERA-SOL SS 560P
C461	87-018-126-080		CAP,TC-U 390P-50 B
C462	87-018-126-080		CAP,TC-U 390P-50 B
C601	87-018-195-080		CAP, CER 1200P-16V
C602	87-018-195-080		CAP, CER 1200P-16V
C611	87-010-545-080		CAP, ELECT 0.22-50V
C612	87-010-545-080		CAP, ELECT 0.22-50V
C613	87-010-545-080		CAP, ELECT 0.22-50V
C614	87-010-545-080		CAP, ELECT 0.22-50V
C615	87-018-104-080		CAP,TC-U 10P-50 SL
C616	87-010-260-080		CAP, ELECT 47-25V
C617	87-010-260-080		CAP, ELECT 47-25V
C701	87-010-404-080		CAP, ELECT 4.7-50V
C702	87-018-134-080		CAPACITOR,TC-U 0.01-16
C703	87-018-134-080		CAPACITOR,TC-U 0.01-16
C704	87-018-131-080		CAP, CER 1000P-50V
C705	87-018-131-080		CAP, CER 1000P-50V
C706	87-018-131-080		CAP, CER 1000P-50V
C707	87-010-112-080		CAP, ELECT 100-16V
C708	87-A11-144-080		CAP,TC U 0.1-50 K B
C709	87-010-248-080		CAP, ELECT 220-10V
C710	87-010-112-080		CAP, ELECT 100-16V
C712	87-018-149-080		CAP,TC-U 15P-50 CH
C713	87-018-149-080		CAP,TC-U 15P-50 CH
C714	87-010-112-080		CAP, ELECT 100-16V
C715	87-018-119-080		CAP, CER 100P-50V
C746	87-018-134-080		CAPACITOR,TC-U 0.01-16
C752	87-018-143-080		CAP,TC-U 4.7P-50 CH
C753	87-010-408-080		CAP, ELECT 47-50V
C755	87-A11-144-080		CAP,TC U 0.1-50 K B
C756	87-018-134-080		CAPACITOR,TC-U 0.01-16
C757	87-018-134-080		CAPACITOR,TC-U 0.01-16
C758	87-010-112-080		CAP, ELECT 100-16V
C759	87-018-134-080		CAPACITOR,TC-U 0.01-16
C761	87-010-404-080		CAP, ELECT 4.7-50V
C762	87-010-400-080		CAP, ELECT 0.47-50V
C763	87-010-401-080		CAP, ELECT 1-50V

REF. NO.	PART NO.	KANRI NO.	DESCRIPTION
C764	87-010-401-080		CAP, ELECT 1-50V
C765	87-018-115-080		CAP, CER 47P-50V
C766	87-010-407-080		CAP, ELECT 33-50V
C768	87-018-208-080		CAP 0.047-50F
C769	87-010-403-080		CAP, ELECT 3.3-50V
C770	87-018-134-080		CAPACITOR,TC-U 0.01-16
C771	87-010-406-080		CAP, ELECT 22-50
C773	87-018-131-080		CAP, CER 1000P-50V
C774	87-010-405-080		CAP, ELECT 10-50V
C776	87-018-134-080		CAPACITOR,TC-U 0.01-16
C783	87-018-202-080		CAP, CER 6800P
C784	87-018-202-080		CAP, CER 6800P
C785	87-010-405-080		CAP, ELECT 10-50V
C786	87-010-405-080		CAP, ELECT 10-50V
C787	87-018-196-080		CAP, CER 1500P-16V
C788	87-018-196-080		CAP, CER 1500P-16V
C789	87-010-403-080		CAP, ELECT 3.3-50V
C790	87-010-403-080		CAP, ELECT 3.3-50V
C801	87-018-134-080		CAPACITOR,TC-U 0.01-16
C802	87-018-134-080		CAPACITOR,TC-U 0.01-16
C803	87-018-134-080		CAPACITOR,TC-U 0.01-16
C804	87-018-134-080		CAPACITOR,TC-U 0.01-16
C805	87-A11-144-080		CAP,TC U 0.1-50 K B
C807	87-A11-144-080		CAP,TC U 0.1-50 K B
C808	87-018-134-080		CAPACITOR,TC-U 0.01-16
C809	87-018-134-080		CAPACITOR,TC-U 0.01-16
C810	87-018-134-080		CAPACITOR,TC-U 0.01-16
C811	87-018-134-080		CAPACITOR,TC-U 0.01-16
C812	87-010-408-080		CAP, ELECT 47-50V
C813	87-018-131-080		CAP, CER 1000P-50V
C851	87-018-123-080		CAP,TC-U 220P-50 K B
C852	87-018-123-080		CAP,TC-U 220P-50 K B
C853	87-018-127-080		CAP,TC-U 470P-50 K B
C854	87-A11-144-080		CAP,TC U 0.1-50 K B
C855	87-010-405-080		CAP, ELECT 10-50V
C856	87-010-405-080		CAP, ELECT 10-50V
C857	87-018-134-080		CAPACITOR,TC-U 0.01-16
C858	87-018-109-080		CAP,TC-U 22P-50
C859	87-018-109-080		CAP,TC-U 22P-50
C860	87-018-134-080		CAPACITOR,TC-U 0.01-16
C901	87-018-209-080		CAP, CER 0.1-50V
C921	87-018-134-080		CAPACITOR,TC-U 0.01-16
C922	87-018-099-080		CAP,TC-U 3.9P-50
C923	87-018-102-080		CAP,TC-U 6.8P-50
C937	87-018-134-080		CAPACITOR,TC-U 0.01-16
C938	87-018-134-080		CAPACITOR,TC-U 0.01-16
C943	87-A11-144-080		CAP,TC U 0.1-50 K B
CF801	87-008-423-010		FLTR,CF SFE10.7MS3G-A
CF802	82-785-747-010		CF,MS2 GHY R
CN301	87-A60-620-010		CONN,3P V 2MM JMT
CN351	87-A60-625-010		CONN,8P V 2MM JMT
CN601	87-099-719-010		CONN,30P TYK-B(X)
CN602	87-099-194-010		CONN,6P 6216V
FB301	87-008-372-080		FLTR,EMI BL01 RN1
FB303	87-008-474-080		F-BEAD,BL02RN1-R62T2 EMI
FB601	87-008-372-080		FLTR,EMI BL01 RN1
FB603	87-008-372-080		FLTR,EMI BL01 RN1
FFE801	A8-6ZA-191-130		6ZA-1 FEENM
J202	87-A60-238-010		TERMINAL,SP 4P (MSC)
J204	87-A60-602-010		JACK,DIA6.3 BLK ST W/SW TC
J601	87-A60-425-010		JACK,PIN 2P YKC21-3838
J801	87-A60-202-010		TERMINAL,ANT 4P MSP-154V-02
L201	87-003-383-010		COIL,1UH-S
L202	87-003-383-010		COIL,1UH-S
L451	87-007-342-010		COIL,OSC 85K BIAS
L701	87-005-847-080		COIL,2.2UH(CECS)
L771	87-A50-266-010		COIL,FM DET-2N(TOK)
L772	87-A90-733-010		FLTR,PCFAZH-450 (TOK)
L801	87-005-847-080		COIL,2.2UH(CECS)
L851	87-005-847-080		COIL,2.2UH(CECS)
L941	87-A50-020-010		COIL,ANT LW(COI)252KHZ
L942	87-A50-019-010		COIL,OSC LW(COI)856KHZ
L981	87-NF4-651-110		COIL,AM PACK 2N(TOM)
RY101	87-A90-464-010		RELAY, DG12D2-O(M)
SFR451	87-024-356-080		SFR,47K H EVN DJAA03
SFR452	87-024-356-080		SFR,47K H EVN DJAA03
TC942	87-011-221-080		TRIMMER,CER 30P 6.15X5.9 VCT51
W101	83-NE2-618-110		F-CABEL,5P-2.5
WH102	87-A90-459-010		HLDR,WIRE 2.5-5P
X701	87-A70-061-010		VIB,XTAL 4.500MHZ CSA-309
X851	87-A70-091-010		VIB,XTAL 4.332MHZ CSA-309

FRONT C.B

C101	87-018-208-080		CAP 0.047-50F
C102	87-010-380-080		CAP, ELECT 47-16V
C201	87-010-497-080		CAP,E 4.7-35 5L
C202	87-010-497-080		CAP,E 4.7-35 5L
C203	87-010-560-040		CAP,E 10-50 GAS
C204	87-010-408-080		CAP, ELECT 47-50V
C205	87-018-208-080		CAP 0.047-50F
C206	87-018-208-080		CAP 0.047-50F
C207	87-018-208-080		CAP 0.047-50F
C210	87-010-263-080		CAP, ELECT 100-10V
C211	87-010-248-080		CAP, ELECT 220-10V
C212	87-018-209-080		CAP, CER 0.1-50V
C213	87-010-494-040		CAP,E 1-50 GAS
C214	87-018-131-080		CAP, CER 1000P-50V
C215	87-018-125-080		CAP, CER 330P-50V
C216	87-018-208-080		CAP 0.047-50F
C217	87-018-131-080		CAP, CER 1000P-50V
C220	87-018-208-080		CAP 0.047-50F
C221	87-018-128-080		CAP, CERA-SOL SS 560P
C223	87-018-131-080		CAP, CER 1000P-50V
C225	87-018-125-080		CAP, CER 330P-50V
C226	87-018-208-080		CAP 0.047-50F
C231	87-010-384-080		CAP, ELECT 100-25V
C241	87-018-117-080		CAP,TC-U 68P-50 SL
C246	87-018-117-080		CAP,TC-U 68P-50 SL
C252	87-010-248-080		CAP, ELECT 220-10V
C281	87-018-125-080		CAP, CER 330P-50V
C282	87-018-125-080		CAP, CER 330P-50V
CN101	87-099-720-010		CONN,30P TYK-B(P)
CN102	87-099-015-010		CONN,13P 6216V
FL301	8Z-NF9-610-010		FL,SVA-10MS12
L101	87-A50-434-010		COIL,CLK 4.19M(TOKO)
R301	87-025-424-080		RES,M/F 10K 1/6W F
R302	87-025-424-080		RES,M/F 10K 1/6W F
S101	87-A90-535-010		SW,RTRY EC16B24304
S301	87-A90-095-080		SW,TACT EVQ11G04M
S302	87-A90-095-080		SW,TACT EVQ11G04M
S303	87-A90-095-080		SW,TACT EVQ11G04M
S304	87-A90-095-080		SW,TACT EVQ11G04M
S305	87-A90-095-080		SW,TACT EVQ11G04M
S308	87-A90-095-080		SW,TACT EVQ11G04M
S309	87-A90-095-080		SW,TACT EVQ11G04M
S310	87-A90-095-080		SW,TACT EVQ11G04M
S311	87-A90-095-080		SW,TACT EVQ11G04M
S312	87-A90-095-080		SW,TACT EVQ11G04M
S313	87-A90-095-080		SW,TACT EVQ11G04M
S314	87-A90-095-080		SW,TACT EVQ11G04M
S315	87-A90-095-080		SW,TACT EVQ11G04M
S316	87-A90-095-080		SW,TACT EVQ11G04M
S317	87-A90-095-080		SW,TACT EVQ11G04M
S318	87-A90-095-080		SW,TACT EVQ11G04M
S319	87-A90-095-080		SW,TACT EVQ11G04M
S320	87-A90-095-080		SW,TACT EVQ11G04M
S321	87-A90-095-080		SW,TACT EVQ11G04M
S322	87-A90-095-080		SW,TACT EVQ11G04M

REF. NO.	PART NO.	KANRI NO.	DESCRIPTION
S323	87-A90-095-080		SW,TACT EVQ11G04M
S324	87-A90-095-080		SW,TACT EVQ11G04M
S325	87-A90-095-080		SW,TACT EVQ11G04M
SFR201	87-024-350-080		SFR 2.2K DIA 6H

AC1 C.B

⚠ FC1	87-A90-505-080		FUSE CLAMP,TP00351-51
⚠ FC2	87-A90-505-080		FUSE CLAMP,TP00351-51
⚠ T1	87-A60-317-010		TERMINAL, 1P MSC
⚠ T2	87-A60-317-010		TERMINAL, 1P MSC

AC2 C.B

⚠ PR101	87-026-681-080		PROTECTOR,5A 491SERIES 60V
⚠ PR102	87-026-681-080		PROTECTOR,5A 491SERIES 60V
WH101	87-A90-459-010		HLDR,WIRE 2.5-5P

TRANSISTOR ILLUSTRATION

E C B

KTA1266GR
KTC3198GR
CSC2001K
2SC535

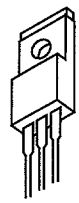

B C E

2SB1370

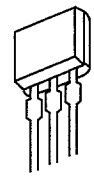

B C E

2SC4115S

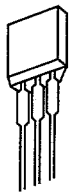

S D G

2SK2541

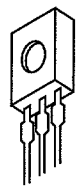

S D G

2SJ460

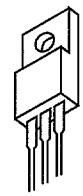

B C E

2SB1342
2SD1933

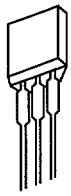

E C B

DTC144ES
DTA114YS
DTA114ES
DTA144ES
DTC143ES

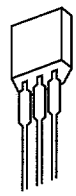

G S D

2SK439

○チップ抵抗部品コード／CHIP RESISTOR PART CODE

チップ抵抗部品コードの成り立ち
Chip Resistor Part Coding

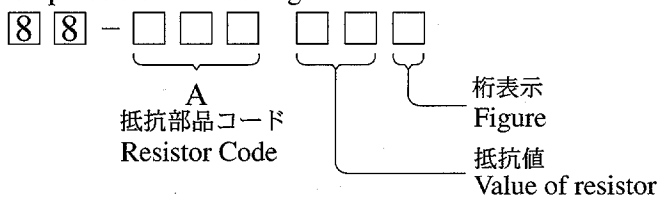

チップ抵抗
Chip resistor

容量 Wattage	種類 Type	許容誤差 Tolerance	記号 Symbol	寸法／Dimensions (mm) 外形／Form	L	W	t	抵抗コード : A Resistor Code : A
1/16W	1005	±5%	CJ	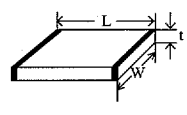	1.0	0.5	0.35	104
1/16W	1608	±5%	CJ		1.6	0.8	0.45	108
1/10W	2125	±5%	CJ		2	1.25	0.45	118
1/8W	3216	±5%	CJ		3.2	1.6	0.55	128

FL GRID ASSIGNMENT AND ANODE CONNECTION

GRID ASSIGNMENT

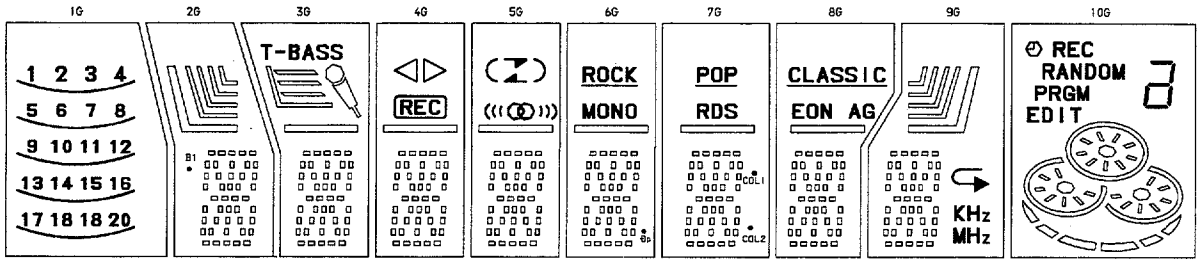

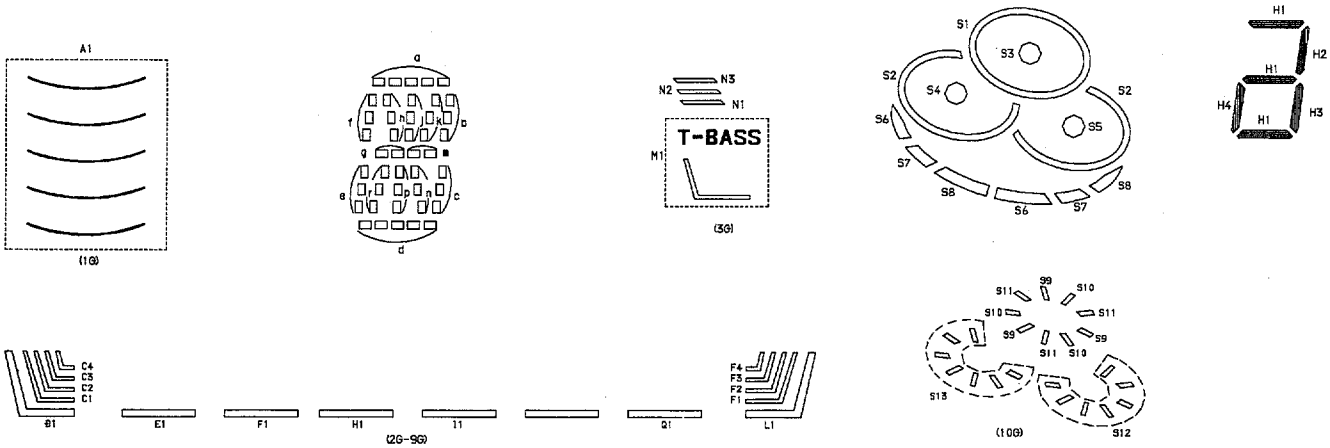

ANODE CONNECTION

	1G	2G	3G	4G	5G	6G	7G	8G	9G	10G
P1	**20**	d	d	d	d	d	d	d	d	S1
P2	**19**	n	n	n	n	n	n	n	n	W9
P3	**18**	p	p	p	p	p	p	p	p	S10
P4	**17**	r	r	r	r	r	r	r	r	S11
P5	**16**	e	e	e	e	e	e	e	e	S3
P6	**15**	c	c	c	c	c	c	c	c	S2
P7	**14**	g	g	g	g	g	g	g	g	S13
P8	**13**	m	m	m	m	m	m	m	m	S4
P9	**12**	f	f	f	f	f	f	f	f	S12
P10	**11**	b	b	b	b	b	b	b	b	S5
P11	**10**	k	k	k	k	k	k	k	k	S6
P12	**9**	j	j	j	j	j	j	j	j	S7
P13	**8**	h	h	h	h	h	h	h	h	S8
P14	**7**	a	a	a	a	a	a	a	a	**EDIT**
P15	**6**	Đ1	E1	F1	H1	Đp	COL2	Q1	**MHz**	**PRGM**
P16	**5**	C1	M1	**REC**	(((∞)))	I1	COL1	**EON**	**KHz**	**RANDOM**
P17	**4**	C2	N1	◁	(	**MONO**	J1	**AG**	⮌	**REC**
P18	**3**	C3	N2	▷	⇄	—	**RDS**	—	L1	🕘
P19	**2**	C4	N3		)	**ROCK**	—	**CLASSIC**	F1	H1
P20	**1**	B1	🖉				**POP**		F2	H2
P21	A1								F3	H3
P22									F4	H4

BLOCK DIAGRAM – (MAIN / FRONT)

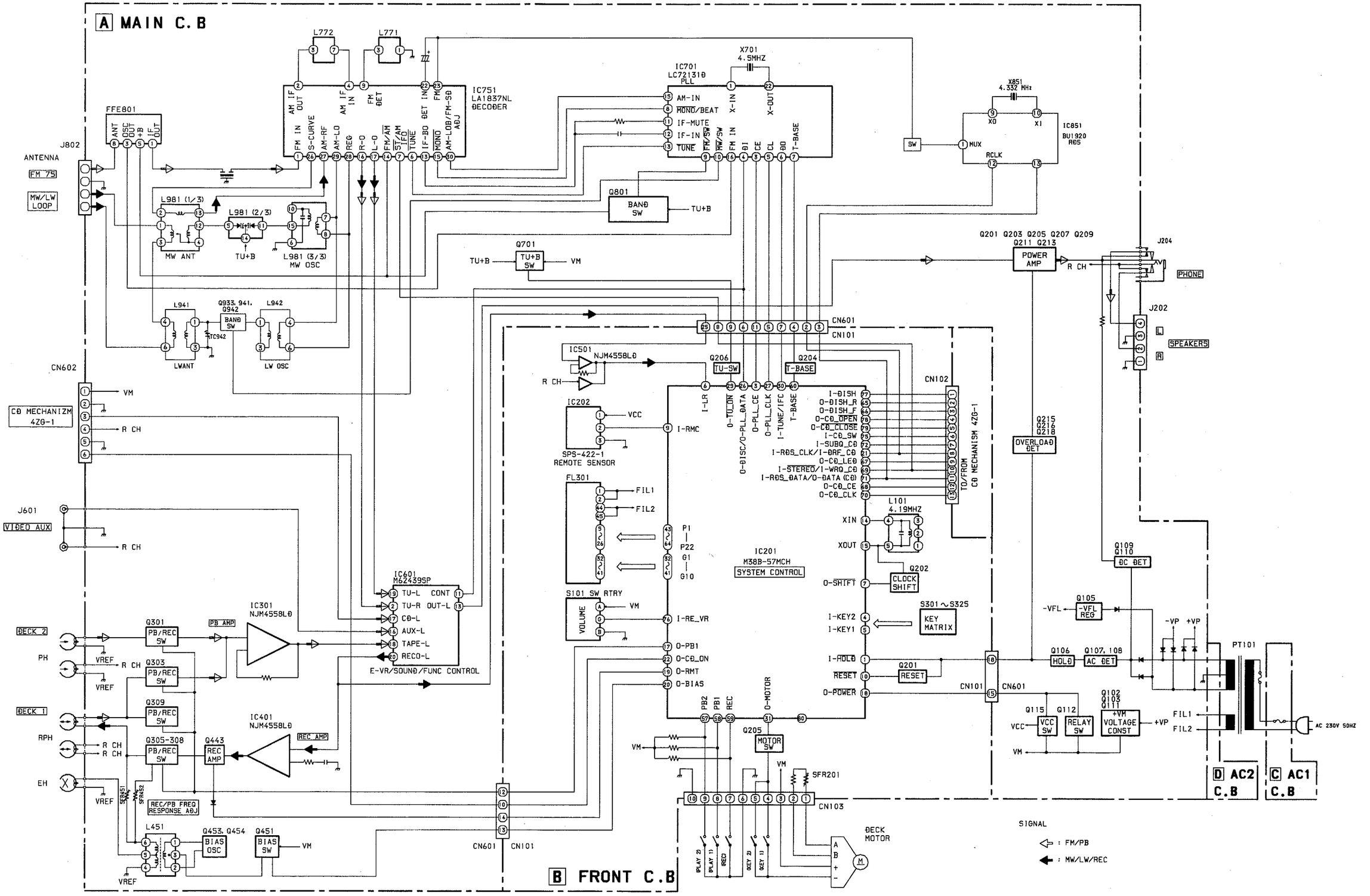

A MAIN C.B

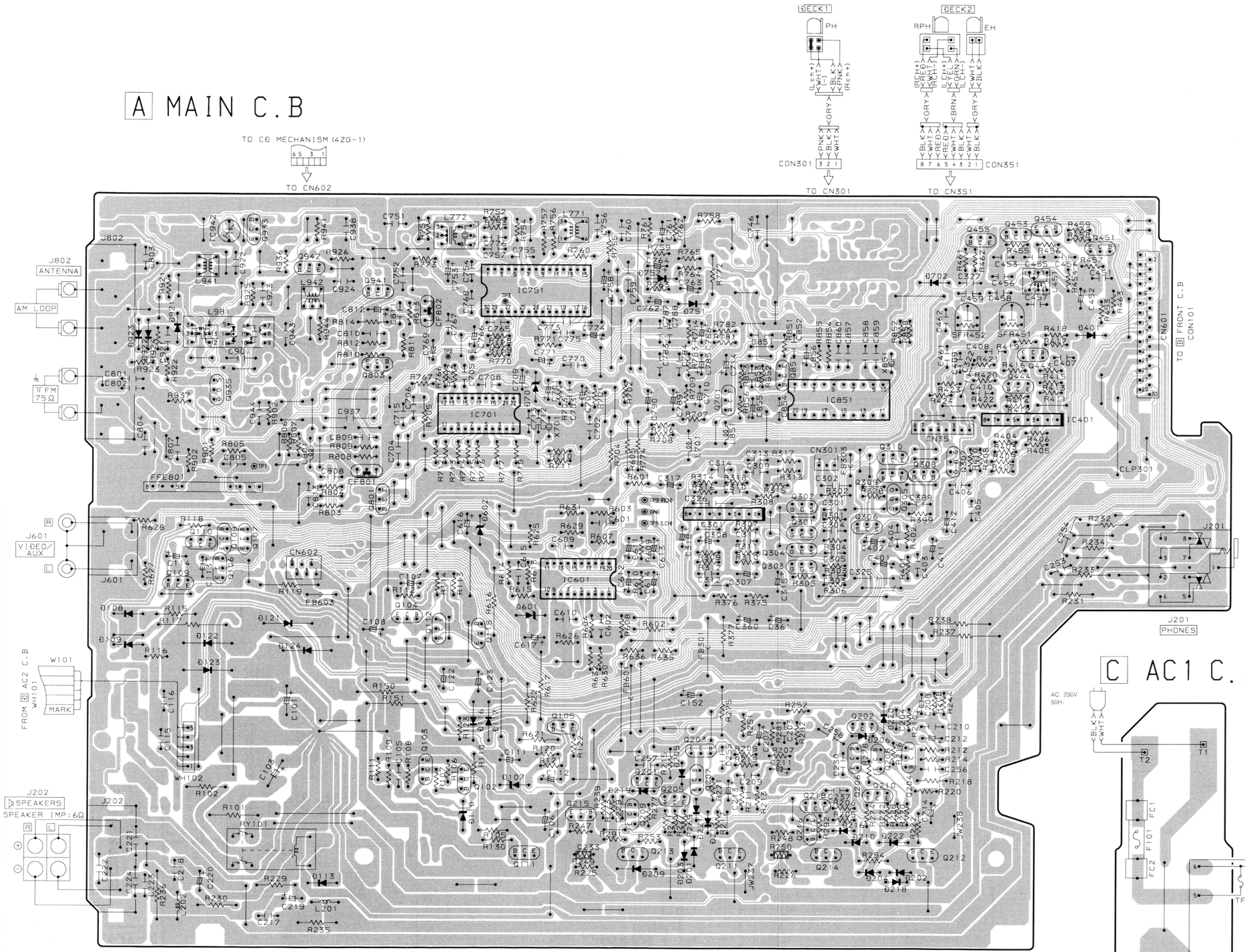

C AC1 C.B Đ AC2 C.B

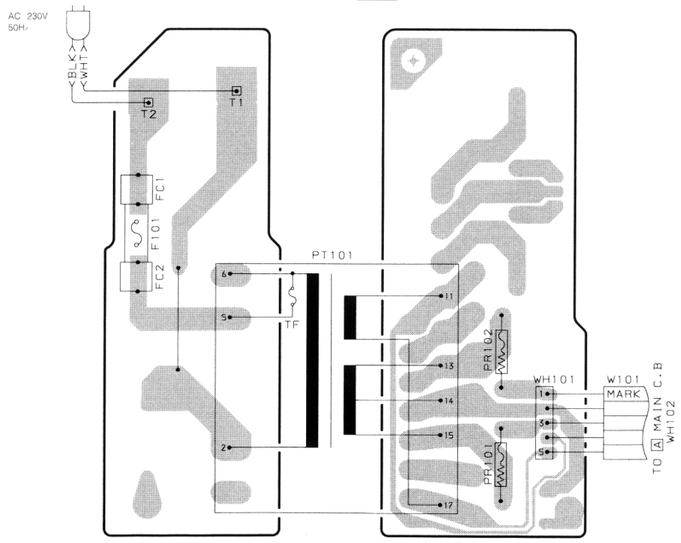

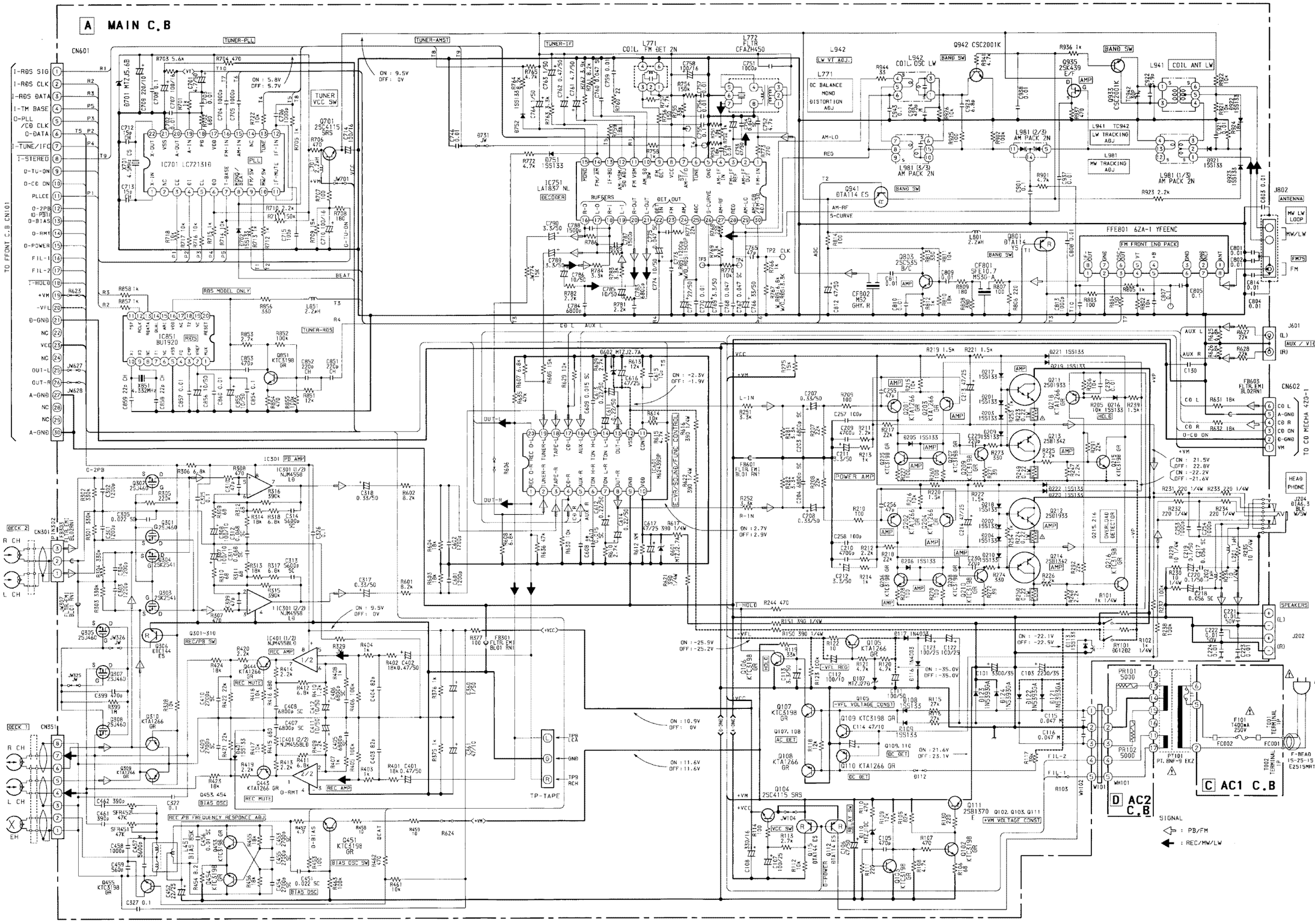
A MAIN C.B
CN601
TUNER-PLL
TUNER-AMST
TUNER-IF
L771 COIL, FM DET 2N
L772 FLTR CFAZH450
L942 COIL OSC LW
Q942 CSC2001K
L941 COIL ANT LW
L981 (2/3) AM PACK 2N
L981 (1/3) AM PACK 2N
IC701 LC72131G
Q701 2SC4115 5R5
IC751 LA1837 NL
DECODER
IC851 BU1920
RDS
IC301 PB AMP
IC401 (1/2) NJM4558D
IC401 (2/2) NJM4558D
IC501 (1/2) NJM4558D
IC501 (2/2) NJM4558D
FFE801 6ZA-1 YFEENC
FM FRONT END PACK
POWER AMP
CN602
TO CD MECHA 423-1
J802 ANTENNA
J601 (L) AUX / VIDEO (R)
J202 SPEAKERS
CN301
CN351
TP-TAPE
AC 230V 50HZ
C AC1 C.B
D AC2 C.B
SIGNAL
: PB/FM
: REC/MW/LW
TO FRONT C.B CN101
TUNER VCC SW
REC/PB SW
REC AMP
REC MUTE
BIAS OSC
BIAS OSC SW
REC/PB FREQUENCY RESPONCE ADJ.
OVERLOAD DETECTOR
+VFL VOLTAGE CONST
+VM VOLTAGE CONST
AM-LO
REG
AM-RF
S-CURVE
BAND SW
L-IN
R-IN
AUX L
AUX R
CD L
CD R
CD ON
HEAD PHONE
FM75
MW LW LOOP
F-BEAD 15-25-15 E2515MRT

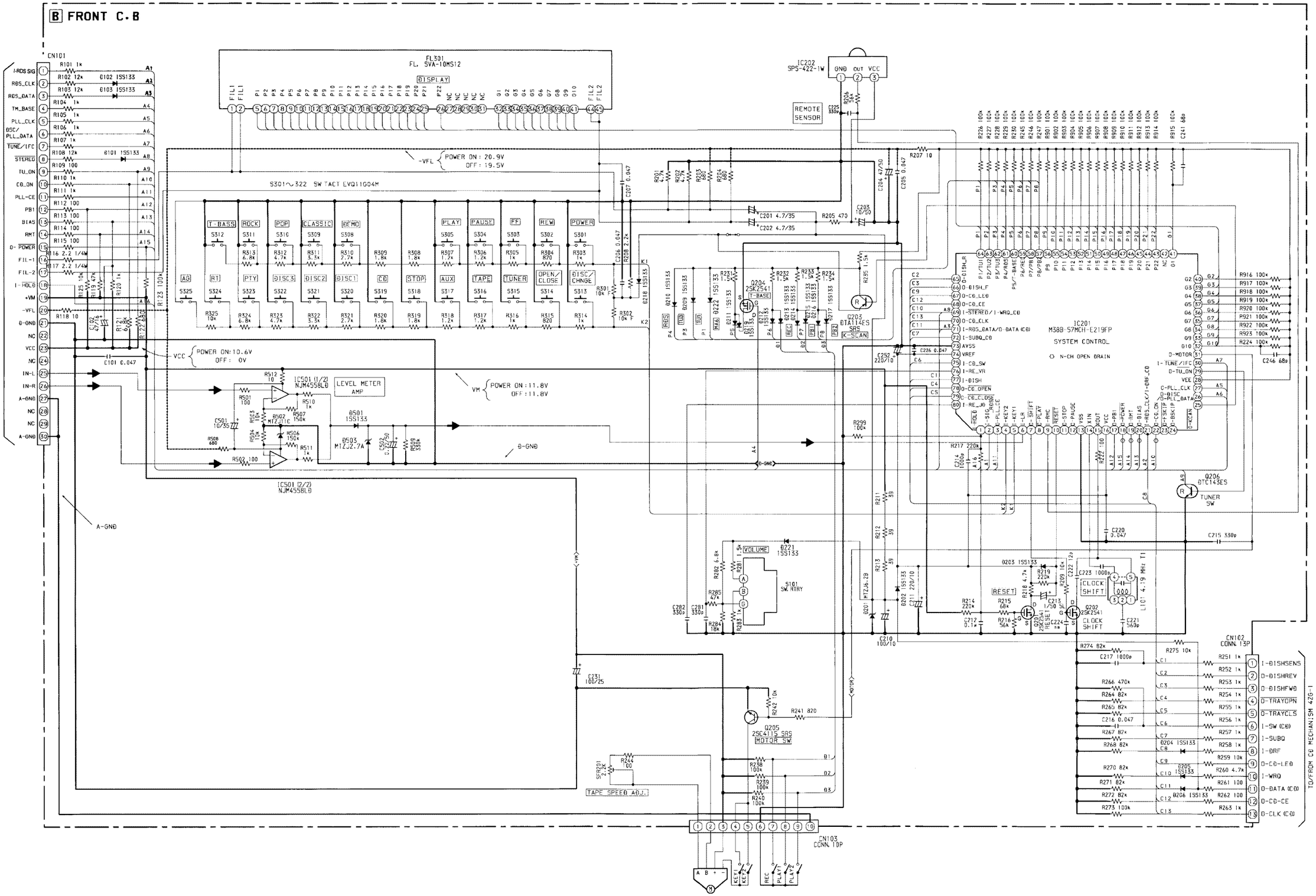
B FRONT C.B
CN101
TO MAIN C.B CN601
FL301
FL, SVA-10MS12
DISPLAY
IC202
SPS-422-1W
GND OUT VCC
REMOTE SENSOR
-VFL POWER ON: 20.9V OFF: 19.5V
S301~322 SW TACT EVQ11G04M
T-BASS
ROCK
POP
CLASSIC
DEMO
PLAY
PAUSE
FF
REW
POWER
PTY
DISC3
DISC2
DISC1
CD
STOP
AUX
TAPE
TUNER
OPEN/CLOSE
DISC/CHNGE
VCC POWER ON: 10.6V OFF: 0V
VM POWER ON: 11.8V OFF: 11.8V
IC501 (1/2) NJM4558LD
LEVEL METER AMP
IC501 (2/2) NJM4558LD
A-GND
D-GND
Q204 2SK2541 T-BASE
Q203 DTA114ES SRS K-SCAN
IC201 M38B-57MCH-E219FP SYSTEM CONTROL
N-CH OPEN DRAIN
Q206 DTC143ES TUNER SW
VOLUME
S101 SW RTRY
Q205 2SC4115 SRS MOTOR SW
TAPE SPEED ADJ.
RESET
CLOCK SHIFT
Q202 2SK2541 CLOCK SHIFT
CN102 CONN. 13P
CN103 CONN. 10P
TO/FROM CD MECHAN;SM 426-1

B FRONT C.B

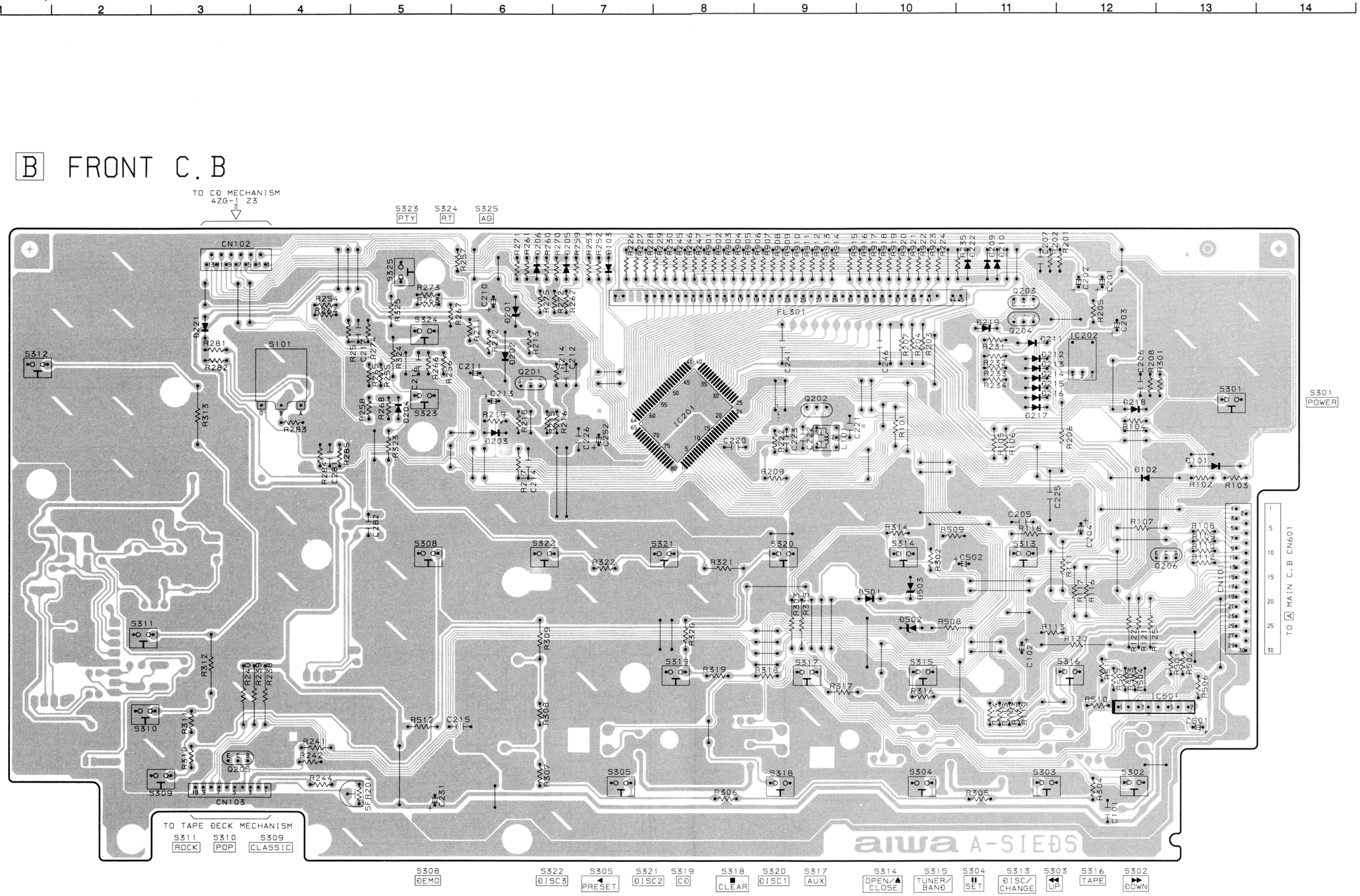
TO CD MECHANISM 4ZG-1 Z3
S323 PTY
S324 RT
S325 AG
S312 T-BASS
S301 POWER
CN102
S101
FL301
IC201
IC202
Q201
Q202
Q203
Q204
S308 DEMO
S322 DISC3
S321 DISC2
S320 DISC1
S319 CD
S318 CLEAR
S317 AUX
S314 OPEN/CLOSE
S315 TUNER/BAND
S313 DISC/CHANGE
S316 TAPE
S311 ROCK
S310 POP
S309 CLASSIC
S305 PRESET
S304 SET
S303 UP
S302 DOWN
CN103
Q205
IC501
TO TAPE DECK MECHANISM
TO A MAIN C.B CN601
aiwa A-SIEDS

IC BLOCK DIAGRAM

IC, M62439SP

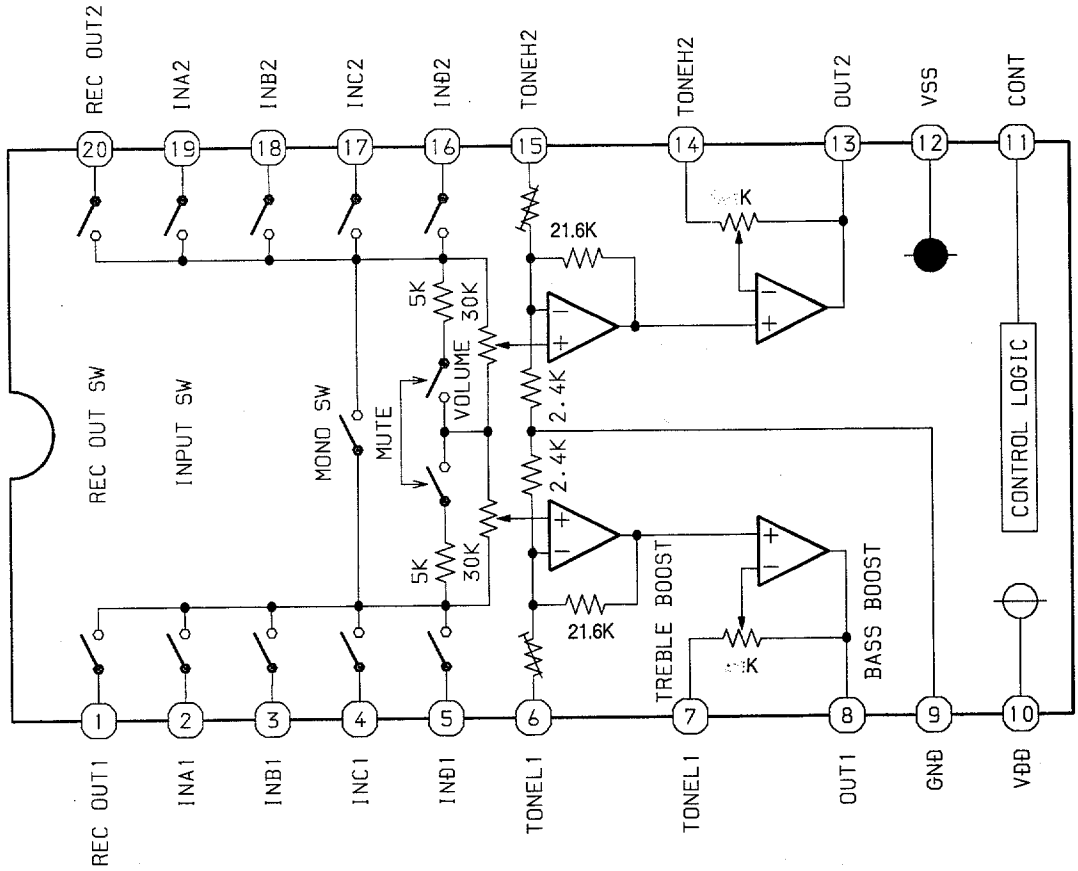

IC, BU1920FS

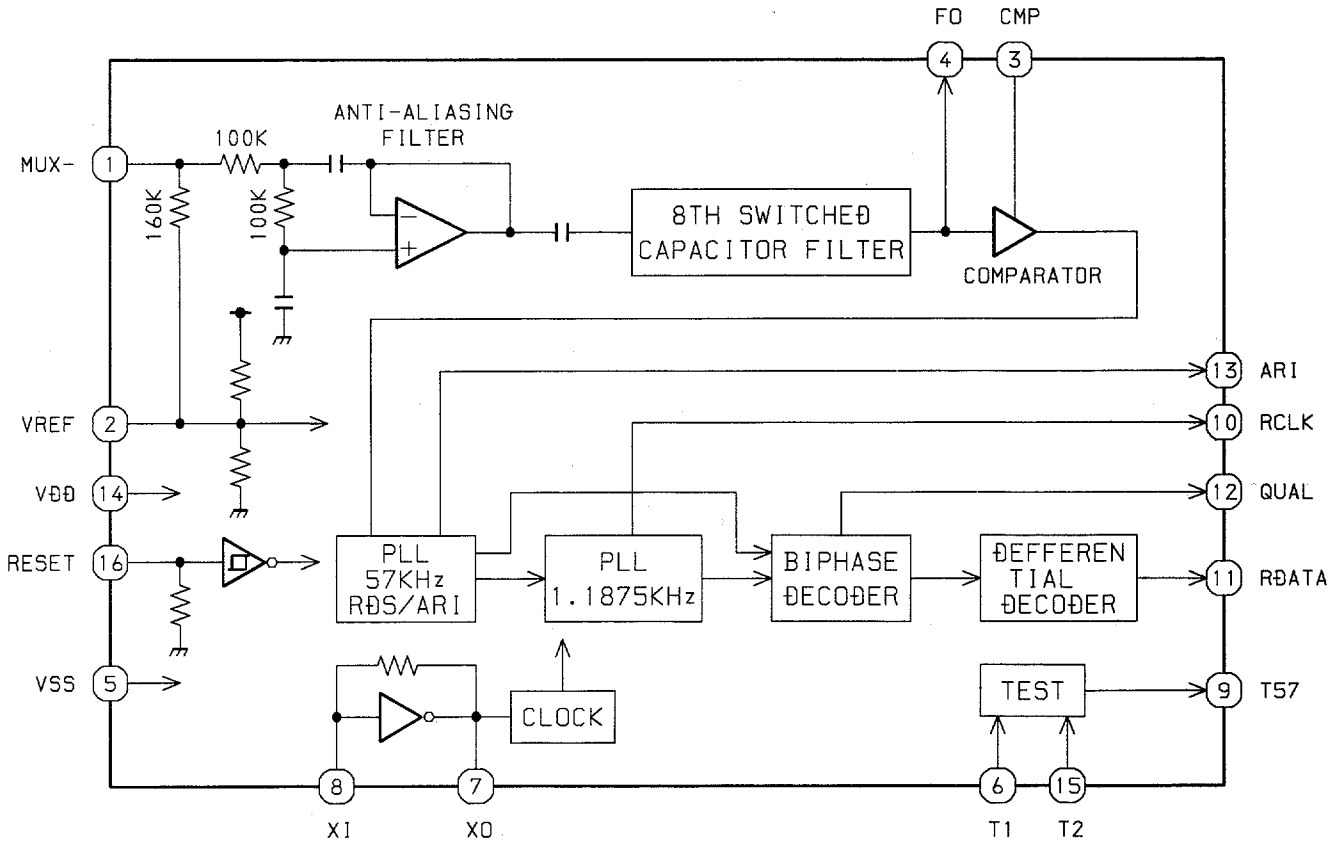

IC, LC72131D

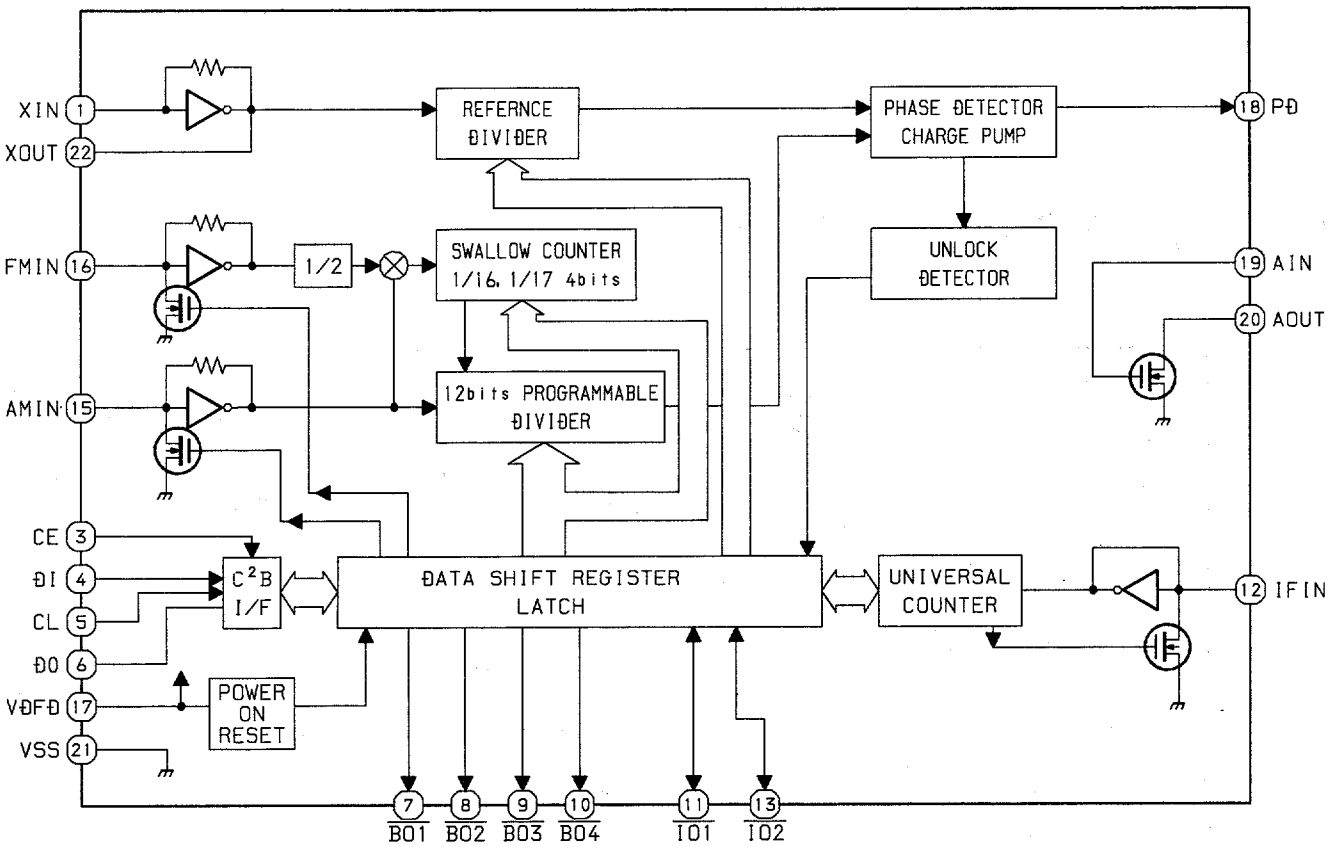

IC, LA1837NL

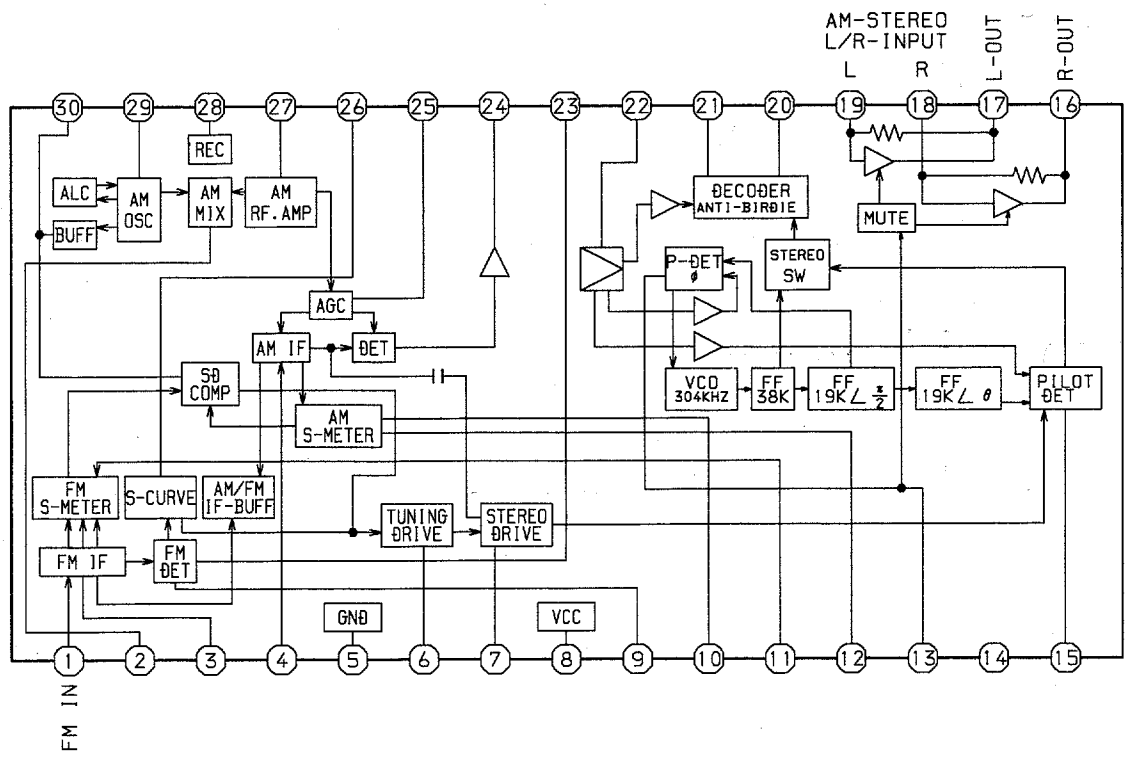

IC DESCRIPTION

IC, M38B-57MCH-E219FP

Pin No.	Pin Name	I/O	Description
1	$\overline{\text{I-HOLD}}$	I	Hold input.
2	I-SIG	I	RDS signal data input.
3	O-PLL_CE	O	PLL chip enable output.
4	I-KEY2	I	Key input.
5	I-KEY1	I	Key input.
6	I-LR	I	Audio signal level meter input.
7	$\overline{\text{O-SHIFT}}$	O	Micon clock shift output.
8	$\overline{\text{O-PLAY}}$	O	PLAY LED control output. (Not connected)
9	I-RMC	I	Remote sensor input.
10	$\overline{\text{RESET}}$	I	Micon reset input.
11	O-STOP	O	STOP LED control output. (Not connected)
12	O-PAUSE	O	PAUSE LED control output. (Not connected)
13	Vss	-	GND.
14	XIN	I	Oscillator circuit input (4.19MHz).
15	XOUT	O	Oscillator circuit output (4.19MHz).
16	VCC	-	Supply (+5.6V).
17	O-PB1	O	Tape play back selector output. (H:Tape-1,L:Tape-2).
18	$\overline{\text{O-POWER}}$	O	Power supply control output.
19	O-RMT	O	REC-MUTE control output.
20	O-BIAS	O	REC control output.
21	I-RDS_CLK/I-DRF_CD	I	RDS clock input./CD unit DRF input.
22	O-CD_ON	O	CD unit voltage power control output.
23	$\overline{\text{O-FSKIP}}$	O	FSKIP LED control output. (Not connected)
24	O-BSKIP	O	BSKIP LED control output. (Not connected)
25	O-KSCAN	O	Key-scan output.
26	O-DISC/O-PLL_DATA	O	Function IC control output./PLL data output.
27	O-PLL_CLK	O	PLL clock output.
28	VEE	-	GND.
29	$\overline{\text{O-TU\_ON}}$	O	Tuner voltage ON/OFF control output.
30	$\overline{\text{I-TUNE}}$/ IFC	I	PLL IC data input.
31	O-MOTOR	O	Tape motor ON/OFF control output.
32 ~ 41	G10 ~ G1	O	FL grid control output.
42	NC	-	Not connected.
43 ~ 55	P22 ~ P10	O	FL segment control outout.
56	P9	I/O	FL segment control output.
57	P8/PB2	I/O	FL segment control output./Key-scan input (TAPE2-PLAY).
58	P7/PB1	I/O	FL segment control output./Key-scan input (TAPE1-PLAY).
59	P6/REC	I/O	FL segment control output./Key-scan input (TAPE2-REC).
60	P5/T-BASE	I/O	FL segment control output./Key-scan input (T-BASE PLL IC).
61	P4/RDS	I/O	FL segment control output./Key-scan input (RDS).
62	P3/TU3	I/O	FL segment control output./Key-scan input (TU3).
63	P2	I/O	FL segment control output.
64	P1/TU1	I/O	FL segment control output../Key-scan input (TU1).
65	O-DISH_R	O	Dish motor reverse control output.
66	O-DISH_F	O	Dish motor forward control output.

Pin No.	Pin Name	I/O	Description
67	O-CD_LED	O	CD LED ON/OFF putput.
68	O-CD_CE	O	CD unit chip enable output.
69	I-STEREO/I-WRQ_CD	I	IF stereo mode input./CD unit WRQ input.
70	O-CD_CLK	O	CD unit clock output.
71	I-RDS_DAT/O-CD_DAT	I/O	RDS data input./CD unit command data output.
72	I-SUBQ_CD	I	CD DSP SUBQ data input.
73	AVSS	-	GND.
74	VREF	I	Maximum voltage for AD input level (5.6V).
75	I-CD_SW	I	CD unit position switch input.
76	I-RE_VR	I	Electrical Volume input.
77	I-DISH	I	CD unit dish sensor input.
78	O-CD_OPEN	O	CD tray open control output.
79	O-CD_CLOSE	O	CD tray close control output.
80	I-RE_JOG	I	JOG -DIAL input.

PRACTICAL SERVICE FIGURE

<TUNER SECTION>

<FM SECTION>

IHF Sensitivity :	Less than 14dBμV
(THD 3%)	[at 87.5MHz]
	Less than 13.0dB
	[at 98.0/108.0MHz]
S/N 50dB Quieting sensitivity :	
(Stereo)	Less than 38dB
	[at 98.0MHz]
Signal to noise ratio :	More than 68dB (mono)
	More than 64dB (stereo)
	[at 98.0MHz]
Distortion :	Less than 1.2% (mono)
	Less than 2.0% (stereo)
	[at 98.0MHz]
Stereo separation :	More than 12dB
	[at 98.0MHz]

<MW SECTION>

Sensitivity :	Less than 60dBμV
(S/N 20 dB)	[at 603kHz]
	Less than 58dBμV
	[at 999 / 1404kHz]
Signal to noise ratio :	More than 36dB (mono)
	More than 34dB (stereo)
	[at 999kHz]
Distortion :	Less than 1.5% (mono)
	Less than 4.0% (stereo)
	[at 1000kHz]
Stereo separation :	More than 15dB
	[at 999kHz]

<LW SECTION>

Sensitivity :	Less than 70dBμV [at 144kHz]
(S/N 20 dB)	Less than 68dBμV [at 198kHz]
	Less than 66dBμV [at 290kHz]

<DECK SECTION>

Tape speed :	3000Hz ± 45Hz
Wow & flutter :	Less than 0.35% (R.M.S)
Take-up torque :	30 ~ 80g/cm (FWD, REV)
Back tension :	2 ~ 5g/cm
PB Output level :	2.8V ± 3dB
Distortion (REC/PB) :	Less than 2.0% (NORM)
Noise level (PB) :	Less than 30mV (NORM)
Noise level (REC/PB) :	Less than 30mV(NORM)
Erase ratio :	More than 60dB
Test tape :	NORM : TTA-602

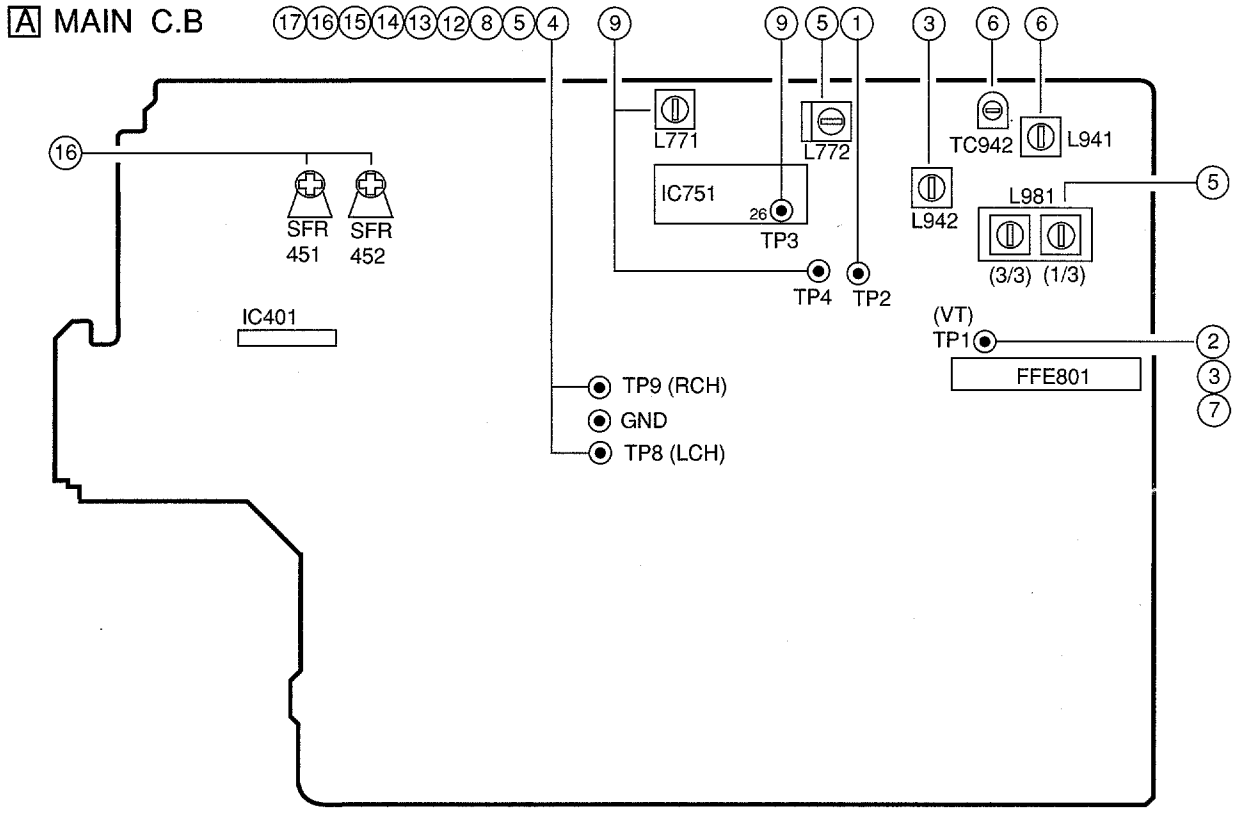

< TUNER SECTION >

1. Clock Frequency Check
   Settings : • Test point : TP2
   Method : Set to MW 1602kHz and check that the test point frequency is 2052kHz ± 45Hz.

2. MW VT Check
   Settings : • Test point : TP1
   Method : Set to MW 1602kHz and MW 531kHz and check that the test point is less than 8.0V(1602kHz) and more than 0.6V(531kHz).

3. LW VT Adjustment
   Settings : • Test point : TP1
   • Adjustment location : L942.....144kHz
   Method : Set to LW 144kHz and adjust L942 so that the test point voltage becomes 1.3V ± 0.05V.Then set to LW 290kHz and check that the test point is less than 8.0V.

4. AM IF Adjustment
   Settings : • Test point : TP8(Lch), TP9(Rch)
   • Adjustment location : L772.....999kHz
   Method : Adjust L772 so that the output level at 999kHz becomes maximum.

5. MW Tracking Adjustment
   Settings : • Test point : TP8(Lch), TP9(Rch)
   • Adjustment location : L981(1/3).....603kHz
   Method : Set up TC941 to center before adjustment.Adjust L981(1/3) so that the level at 603kHz becomes maximum.

6. LW Tracking Adjustment
   Settings : • Test point : TP8(Lch), TP9(Rch)
   • Adjustment location : L941.....144kHz
   TC942.....290kHz
   Method : Set up TC942 to center before adjustment.Adjust L941 so that the level at 144kHz becomes maximum. Then adjust TC942 so that the level at 290kHz becomes maximum.

7. FM VT Check
   Settings : • Test point : TP1
   Method : Set to FM 108.0MHz and check that the test point is less than 8.0V. Set to FM 87.5MHz and check that the test point is more than 0.5V.

8. FM Tracking Check
   Settings : • Test point : TP8(Lch), TP9(Rch)
   Method : Set to FM 98.0MHz and check that the test point is less than 13.0dBμV.

9. DC Balance / Mono Distortion Adjustment
   Settings : • Test point : TP3,TP4 / TP8,TP9
   • Adjustment location : L771
   • Input level : 60 dBμV
   Method : Set to FM 98.0MHz and adjust L771 so that the voltage between TP3 and TP4 becomes 0V ±0.04V. Next, check that the distortion is less than 1.3%.

10. Auto Stop Level Check
    MW
    Method : Check that the input level is within 37 ~ 62dBμV during auto stop at 1000kHZ
    FM
    Method : Check that the input level is within 15 ~ 35dBμV during auto stop at 98.0MHz

B FRONT C.B

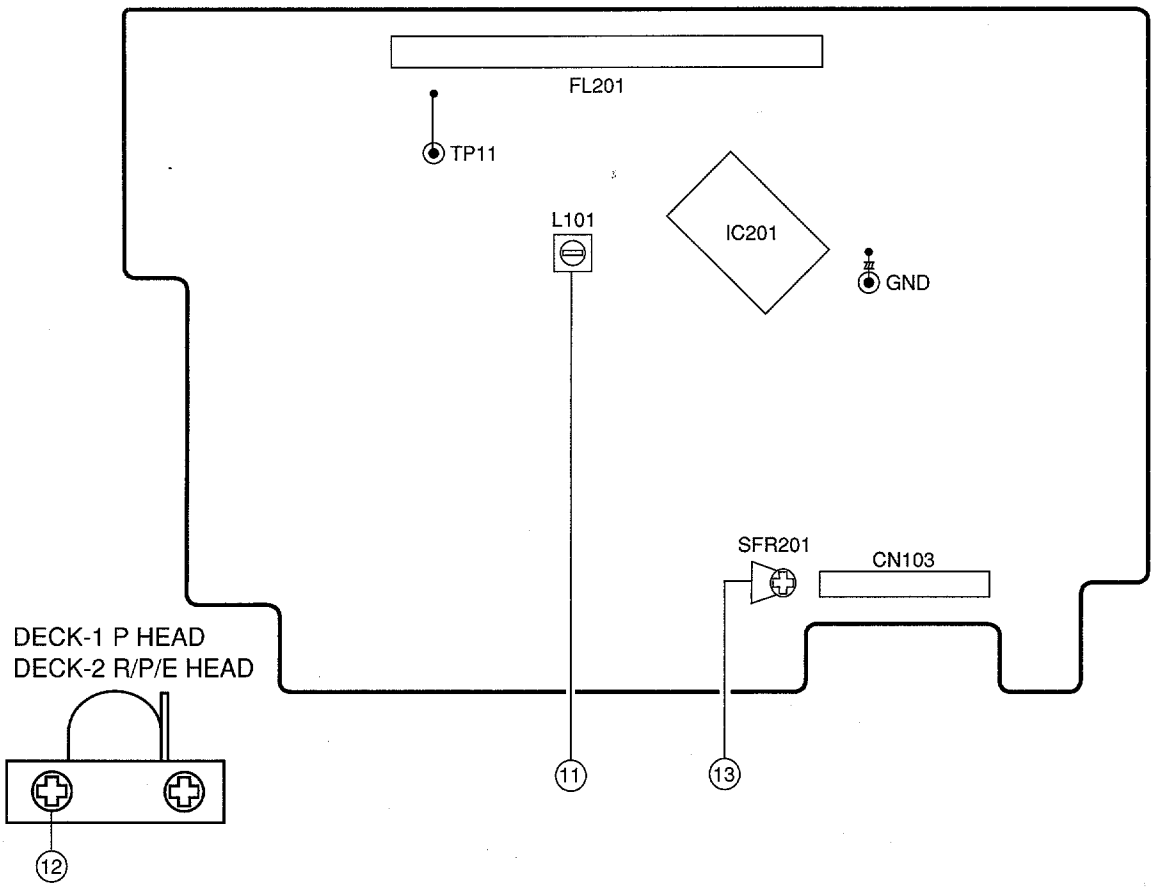

11. μ-con OSC Adjustment
Settings : • Test point : TP11,GND
• Adjustment location : L101
Method : Insert AC plug while pressing TUNER function key. Adjust L101 so that the frequency across the test point becomes 58.349 ± 0.058Hz.

< DECK SECTION >

12. Head Azimuth Adjustment (DECK 1, DECK 2)
Settings : • Test tape : TTA–330
• Test point : TP8,TP9
• Adjustment location : Azimuth adjustment screw
Method : Play back the 8kHz signal of the test tape and adjust screw so that the output becomes maximum.

13. Tape Speed Adjustment
Settings : • Test tape : TTA–100
• Test point : TP8,TP9
• Adjustment location : SFR201
Method : Play back the test tape and adjust SFR201 so that the frequency counter reads 3000Hz ± 5Hz.

14. PB Frequency Response Check (DECK 1, DECK 2)
Settings : • Test tape : TTA–330
• Test point : TP8,TP9
Method : Play back the 315Hz and 8kHz signals of the test tape and check that the output ratio of the 8kHz signal with respect to that of the 315Hz signal is within 5dB.

15. PB Sensitivity Check (DECK 1, DECK 2)
Settings : • Test tape : TTA–200
• Test point : TP8,TP9
Method : Play back the test tape and check the signal level of the test point is 110mV ± 3.0dB.

16. REC/PB Frequency Response Adjustment
Settings : • Test tape : TTA–602
• Test point : TP8,TP9
• Input signal : 1kHz / 8kHz, -26dBV (LINE IN)
• Adjustment location : SFR451(LCH)
SFR452(RCH)
Method : Apply 1kHz signal and REC mode. Then adjust OSC attenuator so that the output level at the TP8,TP9 becomes 8.0~10.0mV. Record and playback the 1kHz and 8kHz signals and adjust SFRs so that the output of the 8kHz signal becomes 0dB ± 0.5dB with respect to that of the 1kHz signal.

17. REC/PB Sensitivity Check
Settings : • Test tape : TTA–602
• Test point : TP8,TP9
• Input signal : 1kHz, -6dBV (LINE IN)
Method : Apply a 1kHz signal and REC mode. Then adjust OSC attenuator so that the output level at the TP8,TP9 becomes 80~100mV. Record and play back the 1kHz signals and check that the output is -2.0dB ± 3.5dB.

MECHANICAL EXPLODED VIEW 1 / 1

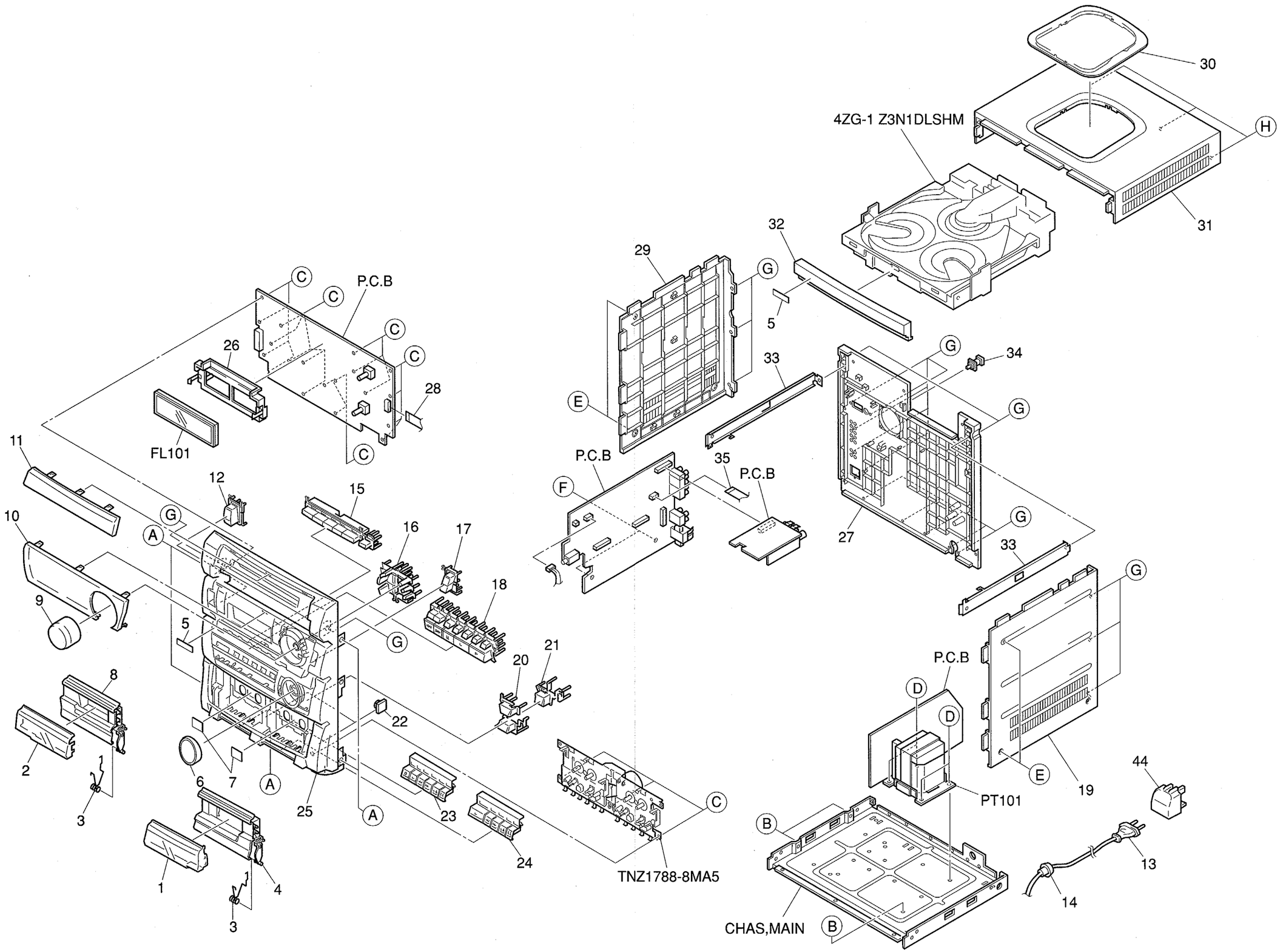

MECHANICAL PARTS LIST 1 / 1

If can't understand for Description please kindly refer to " REFERENCE NAME LIST ".

REF. NO	PART NO.	KANRI NO.	DESCRIPTION
1	8Z-MA4-026-010		WINDOW,CASS R
2	8Z-MA4-025-010		WINDOW,CASS L
3	83-MA2-205-110		SRR-T,EJECT
4	8Z-MA4-007-010		BOX,CASS,R
5	82-NE6-067-010		BADGE,AIWA 30N
6	8Z-MA6-006-010		PLATE,JOG(6)
7	81-532-080-010		LABEL, CASS. COMPT
8	8Z-MA4-006-010		BOX,CASS L
9	8Z-MA4-041-010		KNOB,RTRY VOL
10	8Z-MA6-008-010		WINDOW,AMP EZ(6)
11	8Z-MA4-027-010		WINDOW,CD
12	8Z-MA4-030-010		KEY,POWER
⚠ 13	87-050-079-010		AC-CORD ASSY,E
14	88-NF9-210-010		BUSHING,CORD-E
15	8Z-MA5-016-010		KEY,OPEN(5)
16	8Z-MA4-040-010		KEY,RDS
17	8Z-MA4-032-010		KEY,T-BASS
18	8Z-MA6-005-010		KEY,PLAY(6)
19	8Z-MA5-020-010		PANEL,SIDE R(5)
20	8Z-MA6-014-010		KEY,GEQ 2(6)
21	8Z-MA6-013-010		KEY,GEQ 1(6)
22	86-NFZ-231-010		DMPR,70
23	8Z-MA4-038-010		KEY,CASS L
24	8Z-MA4-039-010		KEY,CASS R
25	8Z-MA6-002-010		CABI,FR EZ(6)
26	82-NF7-210-110		GUIDE,FL (*)
27	8Z-MA5-037-010		CABI,REAR EZ(Z5)
28	88-913-221-110		FF-CABLE, 13P 1.25 220MM
29	8Z-MA5-019-010		PANEL,SIDE L(5)
30	86-MA3-042-010		WINDOW,TOP
31	8Z-MA5-023-010		PANEL,TOP(5)
32	8Z-MA5-010-010		PANEL,TRAY(5)
33	88-MA1-208-110		JOINT,CABI
34	84-ZG1-245-210		CAP,OPTICAL
35	88-906-271-110		CABLE,FFC 6P-1.25
A	87-591-095-410		TAPPING SCREW, QIT+3-8 (GLD)
B	87-721-096-410		QT2+3-10 GLD
C	87-078-060-010		BVIT3PB+3-10
D	87-741-172-410		UT2+4-12 W/O SLOT
E	87-067-641-010		UTT2+3-8(W/O SLOT)BL
G	87-067-703-010		TAPPING SCREW, BVT2+3-10
H	87-067-758-010		BVT2+3-12 W/O SLOT

COLOR NAME TABLE

Basic color symbol	Color	Basic color symbol	Color	Basic color symbol	Color
B	Black	C	Cream	D	Orange
G	Green	H	Gray	L	Blue
LT	Transparent Blue	N	Gold	P	Pink
R	Red	S	Sliver	ST	Titan Silver
T	Brown	V	Violet	W	White
WT	Transparent White	Y	Yellow	YT	Transparent Yellow
LM	Metallic Blue	LL	Light Blue	GT	Transparent Green
LD	Dark Blue	DT	Transparent Orange		

TAPE MECHANISM EXPLODED VIEW 1 / 2

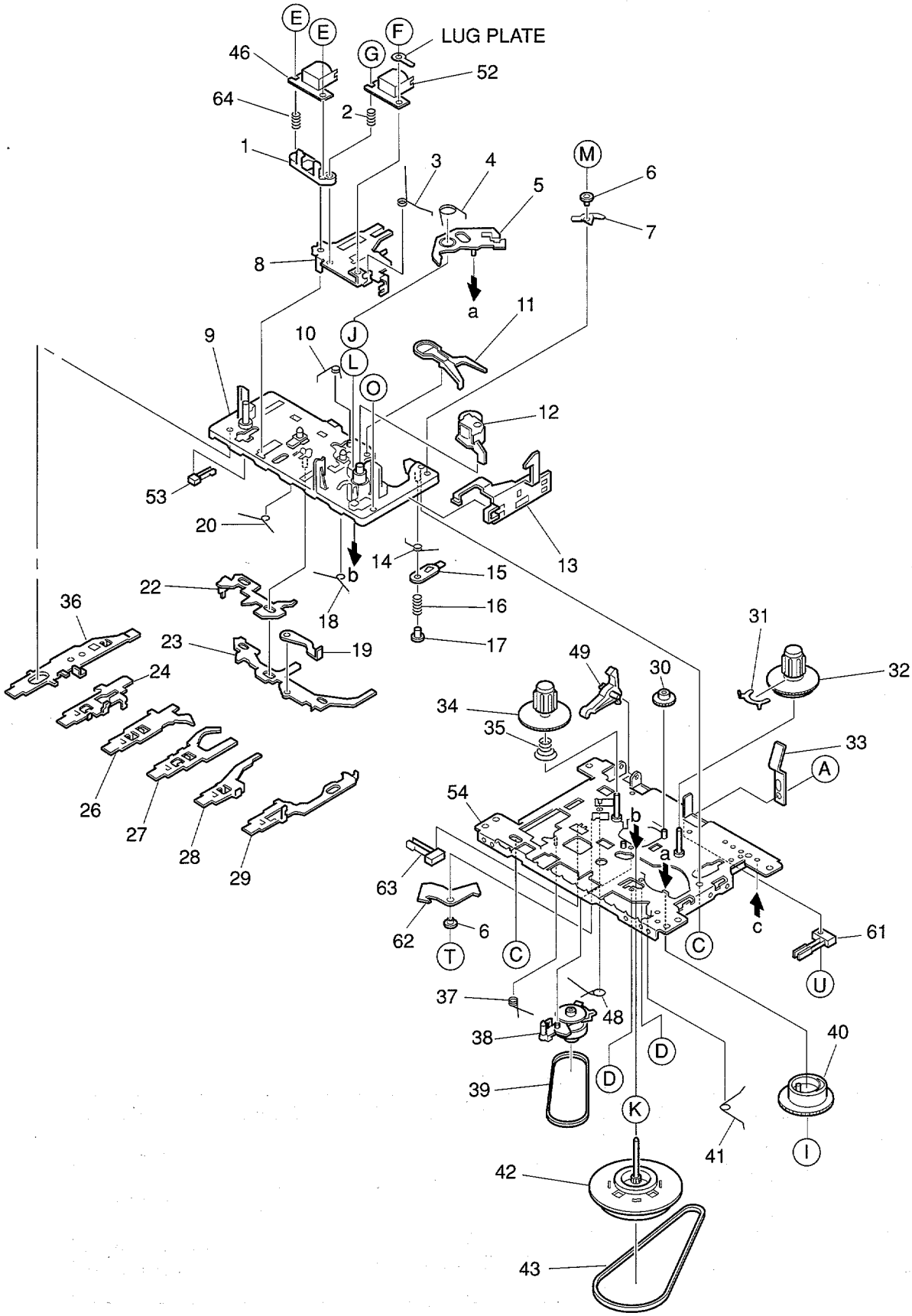

TAPE MECHANISM PARTS LIST 1 / 2

If can't understand for Description please kindly refer to " REFERENCE NAME LIST ".

REF. NO	PART NO.	KANRI NO.	DESCRIPTION
1	S1-921-030-060		HEAD BASE
2	S1-821-030-070		AZIMUTH SPRING
3	S1-921-030-090		PANEL P SPRING
4	S1-921-260-050		GEAR PLATE SPRING
5	S1-921-265-020		GEAR PLATE ASSY
6	S1-921-140-370		P ARM COLLER
7	S1-921-140-340		P ARM
8	S1-921-030-140		HEAD PANEL
9	S1-921-143-170		BASE ASSY
10	S1-921-141-8A0		M CONTROL SPRING
11	S1-921-260-4A0		SENSING LEVER
12	S1-921-043-100		PINCH ROLLER ARM ASSY
13	S1-921-130-020		EJECT SLIDE LEVER
14	S1-921-141-3A0		P CONTROL SPRING
15	S1-921-140-550		PAUSE LEVER(E)
16	S1-921-140-120		PAUSE LEVER SPRING
17	S1-921-140-110		PAUSE STOPPER
18	S1-921-140-150		BUTTON LEVER SPRING(B)
19	S1-921-140-640		E KICK LEVER
20	S1-921-140-140		BUTTON LEVER SPRING(A)
22	S1-921-140-090		SWITCH ACTUATOR
23	S1-921-140-080		PUSH BUTTON ACTUATOR
24	S1-921-140-230		PLAY BUTTON LEVER
26	S1-921-140-240		REW BUTTON LEVER
27	S1-921-140-250		FF BUTTON LEVER
28	S1-921-140-660		STOP BUTTON LEVER
29	S1-921-140-610		PAUSE BUTTON LEVER
30	S1-821-100-700		FF GEAR
31	S1-921-050-060		SENSER
32	S1-921-053-100		TAKE UP REEL ASSY
33	S1-829-100-010		PACK SPRING
34	S1-921-050-150		S REEL HUB
35	S1-921-050-220		BACK TENSION SPRING
36	S1-921-140-220		REC BUTTON LEVER
37	S1-921-140-170		P.S.LEVER SPRING
38	S1-921-073-080		RF CLUTCH ASSY
39	S1-821-070-110		RF BELT
40	S1-921-260-020		CAM GEAR
41	S1-921-140-160		E ACTUATOR SPRING
42	S1-921-093-210		FLYWHEEL ASSY
43	S1-921-090-240		MAIN BELT
46	S6-202-140-190		E,HEAD
48	S1-921-140-210		REC BUTTON LEVER SPRING
49	S1-821-100-690		RECORD SAFETY LEVER
52	S6-202-010-920		R.P HEAD MS15R-AK0N1
53	S6-401-011-490		LEAF SW MSW-1541T
54	S1-921-015-010		CHASSIS ASSY
61	S6-401-010-380		LEAF SWITCH MSW-1275
62	S1-921-020-010		REC ARM
63	S6-401-011-610		LEAF SW MSW-17820MVE1
64	S1-821-030-080		EH SPRING
A	S9-P04-200-310		TAPPING SCREW 2-3
C	S9-B10-200-510		P TAPPING BIND ACREW M2-5
D	S9-C07-204-510		SCREW,TAPPING M2-4.5
E	S9-P17-205-710		+-CAP SCREW M2-7.5
F	S9-B01-200-310		+ BIND SCREW M2-3
G	S9-F08-200-710		AZIMUTH SCREW M2-7
I	S9-W02-300-100		P WASHER CUT 1.2-3.8-0.3
J	S9-W02-500-100		P WASHER CUT 1.45-3.8-0.5
K	S9-W01-400-100		P WASHER 2-3.5-0.4
L	S9-W01-130-200		P WASHER 2.1-4-0.13
M	S9-P08-203-010		PS TAPPING SCREW M2-5
O	S9-P05-200-610		S TAPPING SCREW M2-6
T	S9-P04-200-410		C TAPPING SCREW M2-4
U	S9-P04-200-510		C TAPPING SCREW M2-5

TAPE MECHANISM EXPLODED VIEW 2 / 2

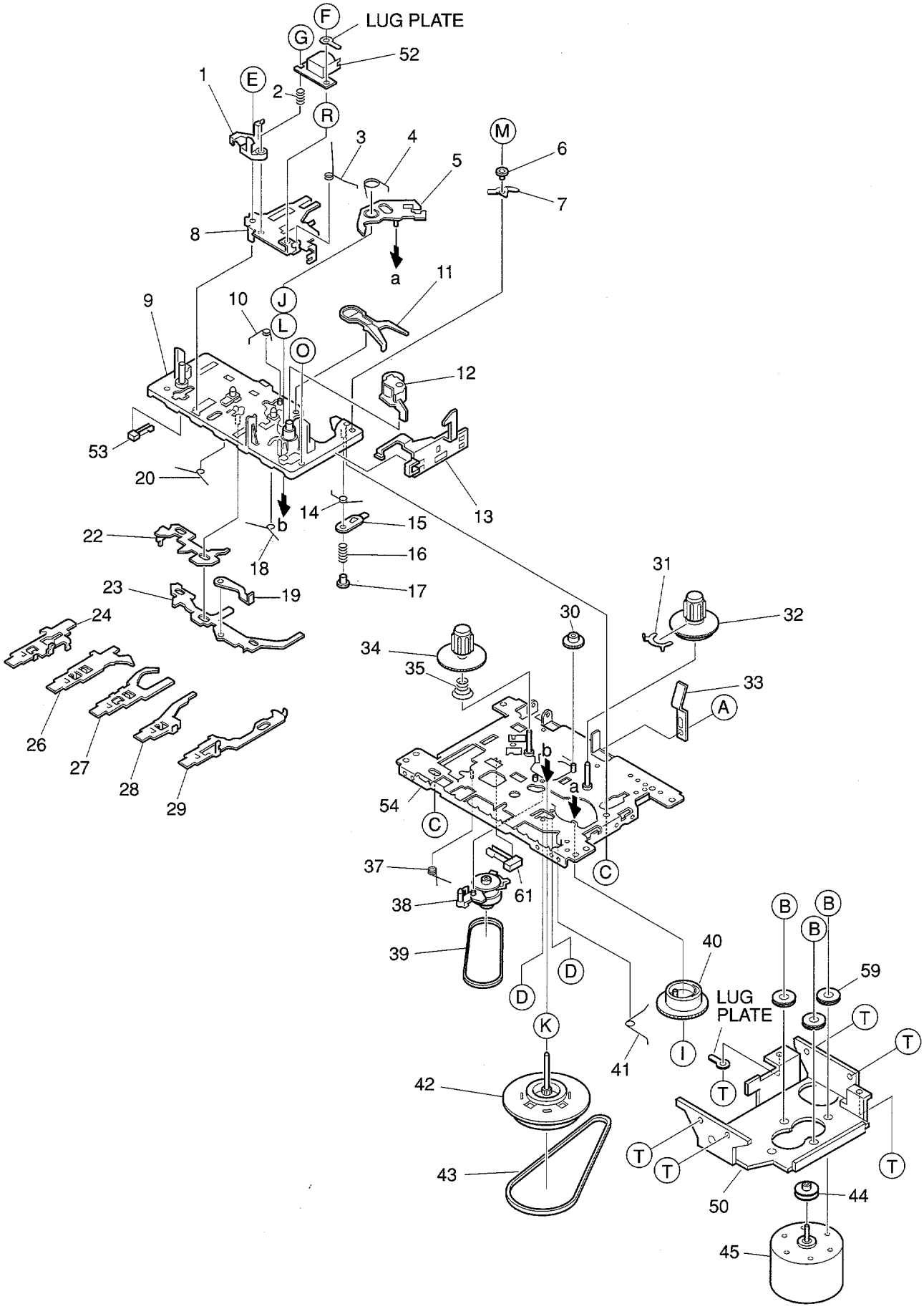

TAPE MECHANISM PARTS LIST 2 / 2

If can't understand for Description please kindly refer to " REFERENCE NAME LIST ".

REF. NO	PART NO.	KANRI NO.	DESCRIPTION
1	S1-921-030-4A0		HEAD BASE
2	S1-821-030-070		AZIMUTH SPRING
3	S1-921-030-090		PANEL P SPRING
4	S1-921-260-050		GEAR PLATE SPRING
5	S1-921-265-020		GEAR PLATE ASSY
6	S1-921-140-370		P ARM COLLER
7	S1-921-140-340		P ARM
8	S1-921-030-110		HEAD PANEL
9	S1-921-143-010		BASE ASSY
10	S1-921-141-8A0		M CONTROL SPRING
11	S1-921-260-4A0		SENSING LEVER
12	S1-921-043-100		PINCH ROLLER ARM ASSY
13	S1-921-130-020		EJECT SLIDE LEVER
14	S1-921-141-3A0		P CONTROL SPRING
15	S1-921-140-550		PAUSE LEVER(E)
16	S1-921-140-120		PAUSE LEVER SPRING
17	S1-921-140-110		PAUSE STOPPER
18	S1-921-140-150		BUTTON LEVER SPRING(B)
19	S1-821-011-590		E KICK LEVER
20	S1-921-140-140		BUTTON LEVER SPRING(A)
22	S1-921-140-090		SWITCH ACTUATOR
23	S1-921-140-080		PUSH BUTTON ACTUATOR
24	S1-921-140-230		PLAY BUTTON LEVER
26	S1-921-140-240		REW BUTTON LEVER
27	S1-921-140-250		FF BUTTON LEVER
28	S1-921-140-260		STOP BUTTON LEVER
29	S1-921-140-610		PAUSE BUTTON LEVER
30	S1-821-100-700		FF GEAR
31	S1-921-050-060		SENSER
32	S1-921-053-100		TAKE UP REEL ASSY
33	S1-829-100-010		PACK SPRING
34	S1-921-050-150		S REEL HUB
35	S1-921-050-220		BACK TENSION SPRING
37	S1-921-140-170		P.S.LEVER SPRING
38	S1-921-073-080		RF CLUTCH ASSY
39	S1-821-070-110		RF BELT
40	S1-921-260-020		CAM GEAR
41	S1-921-140-160		E ACTUATOR SPRING
42	S1-921-093-240		FLYWHEEL ASSY
43	S1-921-090-240		MAIN BBELT
44	S1-921-120-130		MOTOR PULLEY
45	S6-002-030-290		MOTOR EG530YD-2BH
50	S1-921-120-110		MOTOR BRACKET
52	S6-202-010-920		R.P HEAD MS15R-AK0N1
53	S6-401-011-490		LEAF SW MSW-1541T
54	S1-921-015-010		CHASSIS ASSY
59	S1-820-130-060		MOTOR RUBBER
61	S6-401-011-610		LEAF SW MSW-17820MVE1
A	S9-P04-200-310		TAPPING SCREW 2-3
B	S1-821-120-020		MOTOR COLLER SCREW
C	S9-B10-200-510		P TAPPING BIND ACREW M2-5
D	S9-C07-204-510		SCREW,TAPPING M2-4.5
E	S9-P01-200-610		SCREW M2-6
F	S9-B01-200-310		+ BIND SCREW M2-3
G	S9-F08-200-710		AZIMUTH SCREW M2-7
I	S9-W02-300-100		P WASHER CUT 1.2-3.8-0.3
J	S9-W02-500-100		P WASHER CUT 1.45-3.8-0.5
K	S9-W01-400-100		P WASHER 2-3.5-0.4
L	S9-W01-130-200		P WASHER 2.1-4-0.13
M	S9-P08-203-010		PS TAPPING SCREW M2-5
O	S9-P05-200-610		S TAPPING SCREW M2-6
T	S9-P04-200-410		C TAPPING SCREW M2-4

SPEAKER DISASSEMBLY INSTRUCTIONS

Type.1

Insert a flat-bladed screwdriver into the position indicated by the arrows and remove the panel. Remove the screws of each speaker unit and then remove the speaker units.

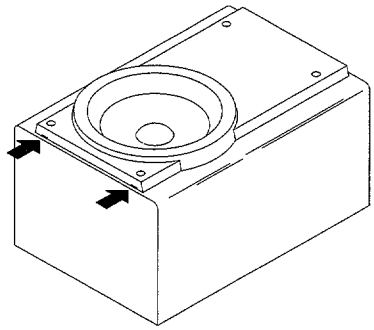

Type.2

Remove the grill frame and four pieces of rubber caps by pulling out with a flat-bladed screwdriver. Remove the screws from hole where installed rubber caps. Insert a flat-bladed screwdriver into the position indicated by the arrows and remove the panel. Remove the screws of each speaker unit and then remove the speaker units. Insert a flat-bladed screwdriver into the position indicated by the

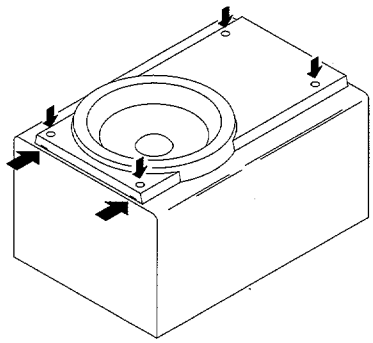

Type.3

arrows and remove the panel. Turn the speaker unit to counterclockwise direction while inserting a flat-bladed screwdriver into one of the hollows around speaker unit, and then remove the speaker unit. After replacing the speaker unit, install it turning to clockwise direction untill "click" sound comes out.

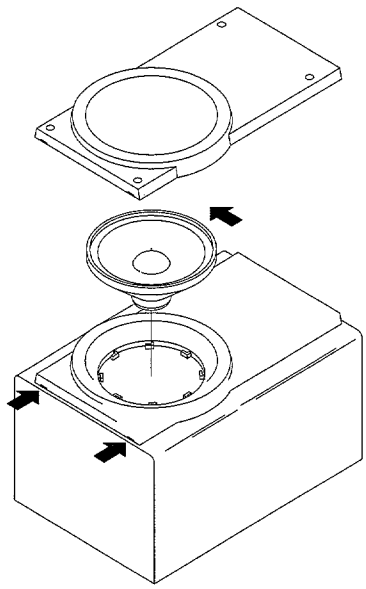

Type.4

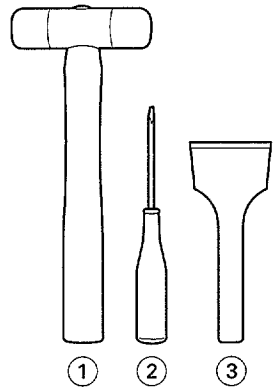

TOOLS

① Plastic head hammer
② (⊖) flat head screwdriver
③ Cut chisel

How to Remove the PANEL, FR

1. Insert the (⊖) flat head screwdriver tip into the gap between the PANEL, FR and the PANEL, SPKR. Tap the head of the (⊖) flat head screwdriver with the plastic hammer head, and create the clearance as shown in Fig-1.

2. Insert the cut chisel in the clearance, and tap the head of the cut chisel with plastic hammer as shown in Fig-2, to remove the PANEL, FR.

3. Place the speaker horizontally. Tap head of the cut chisel with plastic hammer as shown in Fig-3, and remove the PANEL, FR completely.

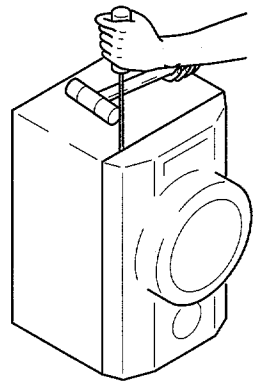

Fig-1

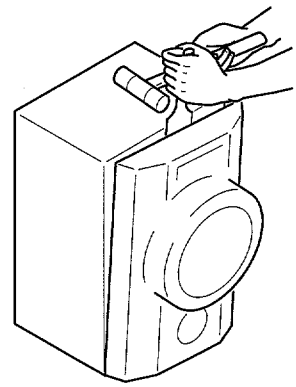

Fig-2

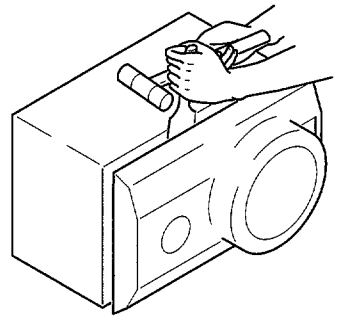

Fig-3

How to Attach the PANEL, FR

Attach the PANEL, FR to the PANEL, SPKR. Tap the four corners of the PANEL, FR with the plastic hammer to fit the PANEL, FR into the PANEL, SPKR completely.

SPEAKER PARTS LIST SX-ZL50 (YSTC)

If can't understand for Description please kindly refer to " REFERENCE NAME LIST ".

REF. NO	PART NO.	KANRI NO.	DESCRIPTION
1	8Z-MSF-002-010		GRILLE,FRAME ASSY
2	83-MSE-605-010		CERAMIC TWEETER
3	8Z-MSF-601-010		SPKR, W 130
4	88-NS5-605-010		SPKR, T 60
5	8Z-MSF-007-010		CORD,SPKR

ACCESSORIES / PACKAGE LIST

If can't understand for Description please kindly refer to " REFERENCE NAME LIST ".

REF. NO	PART NO.	KANRI NO.	DESCRIPTION
1	8Z-MA6-906-010		IB,EZ(9L)M<EZ>
1	8Z-MA6-905-010		IB,K(E)M<K>
2	87-A90-030-010		ANT,LOOP AM-NC C
3	8Z-NF9-701-110		RC UNIT,ZAS02
4	87-043-106-010		WIRE,FM ANT (Z)

REFERENCE NAME LIST

ELECTRICAL SECTION

DESCRIPTION	REFERENCE NAME
ANT	ANTENNAS
C-	CHIP
C-CAP	CAP, CHIP
C-CAP TN	CAP, CHIP TANTALUM
C-COIL	COIL, CHIP
C-DI	DIODE, CHIP
C-DIODE	DIODE, CHIP
C-FET	FET, CHIP
C-FOTR	FILTER, CHIP
C-JACK	JACK, CHIP
C-LED	LED, CHIP
C-RES	RES, CHIP
C-SFR	SFR, CHIP
C-SLIDE SW	SLIDE SWITCH, CHIP
C-SW	SWITCH, CHIP
C-TR	TRANSISTOR, CHIP
C-VR	VOLUME, CHIP
C-ZENER	ZENER, CHIP
CAP, CER	CAP, CERA-SOL
CAP, E	CAP, ELECT
CAP, M/F	CAP, FILM
CAP, TC	CAP, CERA-SOL
CAP, TC-U	CAP, CERA-SOL SS
CAP, TN	CAP, TANTALUM
CERA FIL	FILTER, CERAMIC
CF	FILTER, CERAMIC
DL	DELAY LINE
E/CAP	CAP, ELECT
FILT	FILTER
FLTR	FILTER
FUSE RES	RES, FUSE
MOT	MOTOR
P-DIODE	PHOTO DIODE
P-SNSR	PHOTO SENSER
P-TR	PHOTO TRANSISTOR
POLY VARI	VARIABLE CAPACITOR
PPCAP	CAP, PP
PT	POWER TRANSFORMER
PTR, RES	PTR, MELF
RC	REMOTE CONTROLLER
RES NF	RES, NON-FLAMMABLE
RESO	RESONATOR
SHLD	SHIELD
SOL	SOLENOID
SPKR	SPEAKER
SW, LVR	SWITCH, LEVER
SW, RTRY	SWITCH, ROTARY
SW, SL	SWITCH, SLIDE
TC CAP	CAP, CERA-SOL
THMS	THERMISTOR
TR	TRANSISTOR
TRIMER	CAP, TRIMMER
TUN-CAP	VARIABLE CAPACITOR
VIB, CER	RESONATOR, CERAMIC
VIB, XTAL	RESONATOR, CRYSTAL
VR	VOLUME
ZENER	DIODE, ZENER

MECHANICAL SECTION

DESCRIPTION	REFERENCE NAME
ADHESHIVE	SHEET ADHESHIVE
AZ	AZIMUTH
BAR-ANT	BAR-ANTENNA
BAT	BATTERY
BATT	BATTERY
BRG	BEARING
BTN	BUTTON
CAB	CABINET
CASS	CASSETTE
CHAS	CHASSIS
CLR	COLLAR
CONT	CONTROL
CRSR	CURSOR
CU	CUSHION
CUSH	CUSHION
DIR	DIRECTION
DUBB	DUBBING
FL	FRONT LOADING
FLY-WHL	FLYWHEEL
FR	FRONT
FUN	FUNCTION
G-CU	G-CUSHION
HDL	HANDOL
HIMERON	CLOTH
HINGE, BAT	HINGE, BATTERY
HLDR	HOLDER
HT-SINK	HEAT SINK
IB	INSTRUCTION BOOKLET
IDLE	IDLER
IND, L-R	INDICATOR, L-R
KEY, CONT	KEY, CONTROL
KEY, PRGM	KEY, PROGRAM
KNOB, SL	KNOB, SLIDE
LBL	LABEL
LID, BATT	LID, BATTERY
LID, CASS	LID, CASSETTE
LVR	LEVER
P-SP	P-SPRING
PANEL, CONT	PANEL, CONTROL
PANEL, FR	PANEL, FRONT
PRGM	PROGRAM
PULLY, LOAD MO	PULLY, LOAD MOTOR
RBN	RIBBON
S-	SPECIAL
SEG	SEGMENT
SH	SHEET
SHLD-SH	SHIELD-SHEET
SL	SLIDE
SP	SPRING
SP-SCREW	SPECIAL-SCREW
SPACER, BAT	SPACER, BATTERY
SPR	SPRING
SPR-P	P-SPRING
SPR-PC-PUSH	P-SPRING, C-PUSH
T-SP	T-SPRING
TERM	TERMINAL
TRIG	TRIGGER
TUN	TUNING
VOL	VOLUME
W	WASHER
WHL	WHEEL
WORM-WHL	WORM-WHEEL

サービス技術ニュース	
番号	連絡内容
G— —	
G— —	
G— —	

アイワ株式会社
AIWA CO.,LTD.

〒110-8710 東京都台東区池之端1-2-11 ☎03（3827）3111（代表）

9820527, 931261

Tokyo Japan

Printed in Singapore